CUYAHOGA COUNTY	OHIO	1
CUY–STOKES BLVD.	FHWA REGION 5	58

STATE OF OHIO
DEPARTMENT OF TRANSPORTATION
CUY-STOKES BOULEVARD
CITY OF CLEVELAND
CUYAHOGA COUNTY

RECONSTRUCTION OF EXISTING SEPARATED CROSSING WITH THE CSX TRANSPORTATION, NORFOLK SOUTHERN RAILWAY CO. & GREATER CLEVELAND REGIONAL TRANSIT AUTHORITY

DESIGN DESIGNATION

Current A.D.T. (1995)	= 23,335
Design Year A.D.T. (2015)	= 29,400
D.H.V.	= 2,940
D	= 100%
T	= 1%
Design Speed	= 35 M.P.H.
Legal Speed	= 35 M.P.H.
Functional Classification	= URBAN COLLECTOR
DESIGN EXCEPTION	= NONE

CONVENTIONAL SIGNS

County Line
Township Line
Section Line
Corporation Line
Fence Line (existing) (proposed)
Center Line 200 201 202
Trees , Stumps , (to be removed)
Catch Basin (existing) (proposed) (adjust/reconstruct)
Manhole (existing) (proposed) (adjust/reconstruct)

Limited Access (only) LA
Right of Way (only) R/W
Limited Acess & Right of Way LA – R/W
Existing Right of Way R/W
Property Line (in existing fence)
Railroad or
Guardrail (existing) (proposed)
Utility Poles: Telephone, Power, Light

INDEX OF SHEETS

TITLE SHEET	1
TYPICAL SECTIONS	2
GENERAL NOTES	3,3A
MAINTENANCE OF TRAFFIC	4,5
NIGHT TIME DETOUR PLAN	5A
GENERAL SUMMARY	6,7
PLAN AND PROFILE	8,9
CROSS SECTIONS	10–13
FENCE PLAN AND MISCELLANEOUS DETAILS	13A
MISCELLANEOUS DETAILS	14
WATERWORK	15–23, 23A & 24–27
LIGHTING NOTES	28
LIGHTING DETAILS	29
LIGHTING AND PAVEMENT MARKING PLAN	30
C.P.P. GENERAL NOTES	30A,30B
C.P.P. PLAN AND DETAILS	30C,30D
STRUCTURE	31–36, 36A, 36B, 37, 37A, 37B, 37C, 38–43, 43A, 44–53
RIGHT OF WAY	54–58

LINE DATA

BEGIN PROJECT	STA. 12+40.00
END PROJECT	STA. 19+30.00
LENGTH OF PROJECT	690 L.F. OR
	0.13 MILES
BEGIN WORK	STA. 12+00.00
END WORK	STA. 20+00.00
LENGTH OF WORK	800 L.F. OR
	0.15 MILES

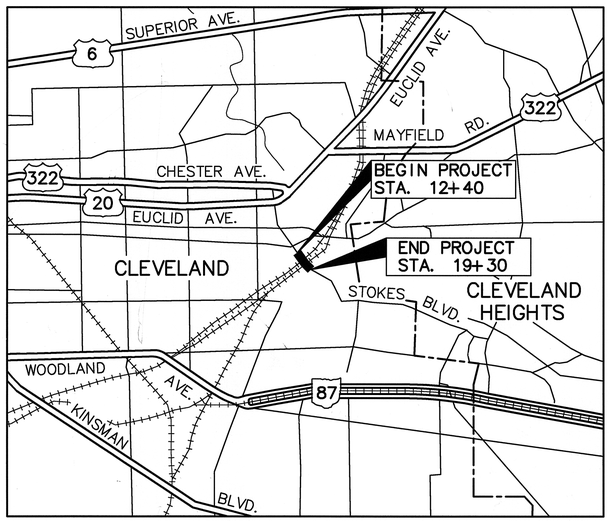

N

LOCATION MAP

LATITUDE: 41°29'51" NORTH
LONGITUDE: 81°36'33" WEST

SCALE IN MILES
0 1 2 3 4

PORTION TO BE IMPROVED
U.S. & STATE ROUTES 322 87
OTHER ROADS

Plan & Profile: Horizontal 0 20 40 Vertical 0 5 10
Cross Sections: Horizontal 0 5 10 Vertical 0 5 10

UNDERGROUND UTILITIES

TWO WORKING DAYS
BEFORE YOU DIG
Call...800–362–2764 (Toll Free)
OHIO UTILITES PROTECTION SERVICE
NON–MEMBERS
MUST BE CALLED DIRECTLY

PROJECT DESIGNATION

THE STREET NAME, STOKES BOULEVARD, WAS FORMERLY KNOWN AS FAIRHILL ROAD. ANY REFERENCE IN THESE PLANS TO FAIRHILL ROAD SHALL BE CONSIDERED TO READ STOKES BOULEVARD.

1997 SPECIFICATIONS

The standard specifications of the State of Ohio, Department of Transportation, including changes and supplemental specifications listed in the proposal shall govern this improvement.

I hereby approve these plans and declare that the making of this improvement will not require the closing to traffic of the highway except as noted on sheet 5A and that provisions for the maintenance and safety of traffic will be as set forth on the plans and estimates.

SUPPLEMENTAL SPECIFICATIONS

806	9/9/97	899	10/21/98
816	4/21/97		
830	10/21/98		
842	1/6/99	954	9/9/97
846	9/9/97	905	4/1/98
814	6/2/98	906	5/5/98
863	9/9/97	907	10/21/98
877	4/13/99	908	3/28/00
843	5/5/98	910	7/28/98

SUPPLEMENTAL PRINTS OF STANDARD CONSTRUCTION DRAWINGS

BP–2.1	7/28/00	DM–1.1M	10/21/97	HL–20.11	5/1/87	AS–1–81	9/15/94	MT–35.10M	1/30/95
BP–2.2	7/28/00	DM–4.3	4/29/99	HL–20.14	5/1/87	GSD–1–96	2/12/97	MT–35.11M	1/30/95
BP–2.3	7/28/00	DM–4.4	4/29/99	HL–30.11	5/1/87	PCB–91	7/6/99	MT–99.10M	1/30/95
BP–2.5	7/28/00	RM–4.2M	10/21/97	HL–30.22	5/1/87	EXJ–4–87	2/14/97	MT–101.60M	4/25/94
BP–3.1	7/28/00	RM–4.3M	10/21/97	HL–30.31	5/1/87	BS–1–93	12/19/94	MT–105.10M	4/25/94
BP–4.1	7/28/00			HL–50.21	5/1/87	BR–2–98	12/29/98	MT–105.11M	4/25/94
BP–5.1	7/28/00			HL–60.11	5/1/87	VPF–1–90M	3/20/95	MT–110.20M	3/1/96
F–1.1	7/28/00								
MH–1.1M	10/21/97								
MH–1.2M	9/6/95								

STATE OF OHIO · G. WENDELL MURRAY · 27843 · REGISTERED · PROFESSIONAL ENGINEER

Sept. 11, 2000

Plans Prepared By:
STILSON & ASSOCIATES, INC.
614 Superior Ave., NW
Cleveland, Ohio 44113

Approved Date 10-2-00 Director of Public Service, City of Cleveland

Approved Date 6NOV2000 District Deputy Director of Transportation

Approved Date 12-20-00 Director, Department of Transportation

DEPARTMENT OF TRANSPORTATION
FEDERAL HIGHWAY ADMINISTRATION

APPROVED

DIVISION ADMINISTRATOR DATE

Project: CUY–STOKES BLVD. P.I.D.: 8800
Date of Letting ,Contract No.

[AutoCad R14 – PAT] – I:\PROJECTS\90318662.20\ACAD\01OF58.DWG – SEPT 01, 1999 – 16:09:55
CUY - Stokes Blvd.
010139 PID - 8800
Dist 12 3/14/01

Stokes 0031 (4:021) SFN: 1833936

4:021

TYPICAL SECTIONS

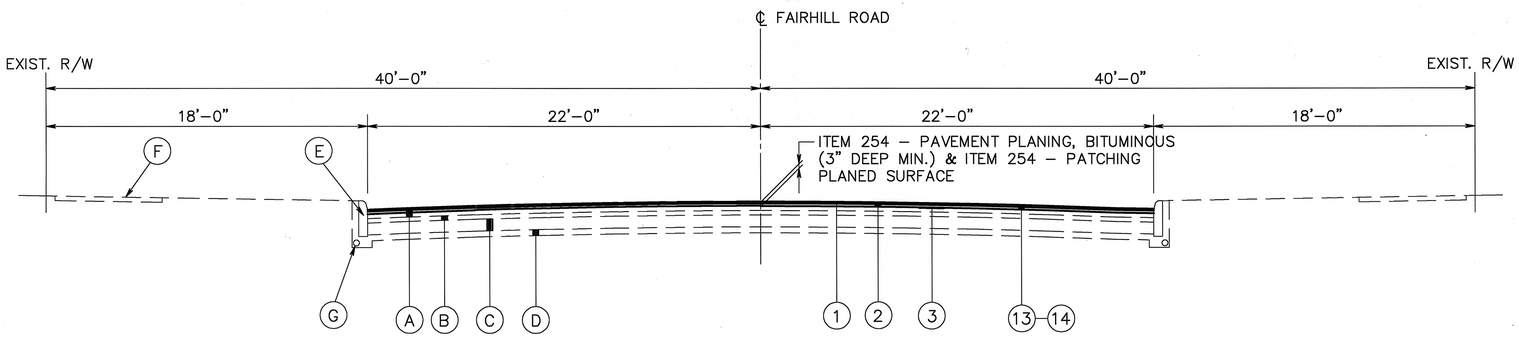

NOTE:
EXISTING PAVEMENT WIDTH VARIES THROUGHOUT PROJECT LIMITS, HOWEVER, THE EXIST. PAVEMENT COMPOSITION IS THE SAME AS SHOWN IN THE FEATHER SECTION.

FEATHER SECTION

STA. 12+30 TO STA. 12+40 = 10.00 LIN. FT.
STA. 19+30 TO STA. 19+40 = 10.00 LIN. FT.

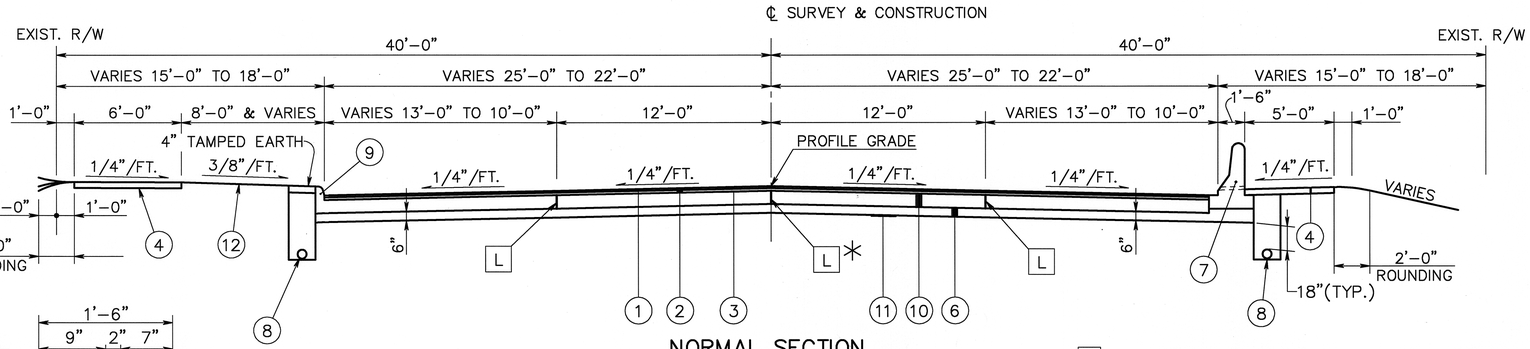

NORMAL SECTION

STA. 12+40.00 TO STA. 13+45.00 = 105.00 LIN. FT. (WIDTH VARIES)
STA. 13+45.00 TO STA. 15+05.88 = 160.88 LIN. FT.
STA. 17+33.70 TO STA. 18+40.00 = 106.30 LIN. FT.
STA. 18+40.00 TO STA. 19+30.00 = 90.00 LIN. FT. (WIDTH VARIES)

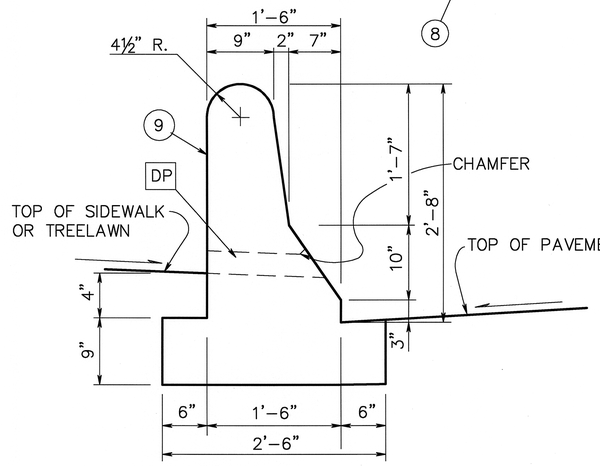

CONCRETE BARRIER, TYPE D, AS PER PLAN

DP – 12" x 3" DRAINPORTS @ 10'–0" c/c (MAX.)
SEE STANDARD DRAWING MC–9 FOR ADDITIONAL DETAILS AND NOTES.

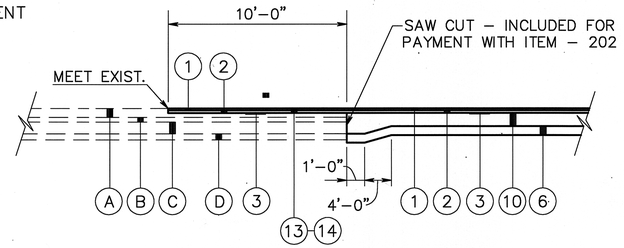

THICKENED EDGE JOINT DETAIL

USE 705.03 PREFORMED EXPANSION JOINT FILLER BETWEEN THE INTERFACE OF THE PROPOSED AND EXISTING CONCRETE

L – LONGITUDINAL JOINT, AS PER STANDARD DRAWING BP–2.1

✳ – UNTIED

PAVEMENT LEGEND:

1. ITEM 448 – 1¼" ASPHALT CONCRETE, SURFACE COURSE, TYPE 1, PG 64–22
2. ITEM 448 – 1¾" ASPHALT CONCRETE, INTERMEDIATE COURSE, TYPE 2, PG 64–22
3. ITEM 407 – TACK COAT
4. ITEM 608 – 4" CONCRETE WALK
5. ITEM 611 – REINFORCED CONCRETE APPROACH SLAB
6. ITEM 304 – AGGREGATE BASE, AS PER PLAN
7. ITEM 622 – CONCRETE BARRIER, TYPE D, AS PER PLAN (THIS SHEET)
8. ITEM 605 – 6" SHALLOW PIPE UNDERDRAIN, WITH FABRIC WRAP
9. ITEM 830 – CURB, TYPE 2–B
10. ITEM 305 – 9" CONCRETE BASE
11. ITEM 203 – SUBGRADE COMPACTION
12. ITEM 659 – SEEDING AND MULCHING
13. ITEM 254 – PAVEMENT PLANING, BITUMINOUS
14. ITEM 254 – PATCHING PLANED SURFACE

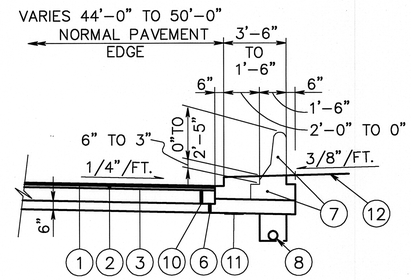

BARRIER TRANSITION DETAIL

STA. 13+00.00 TO STA. 13+20.00 (RT.) = 20.00 LIN.FT.
STA. 14+90.45 TO STA. 15+10.45 (LT.) = 20.00 LIN.FT.

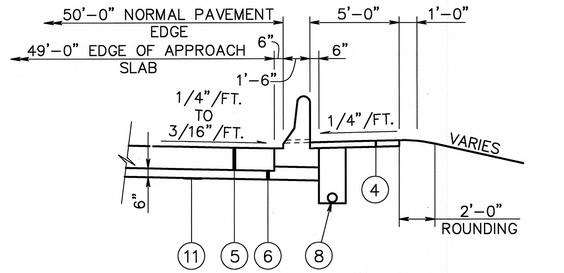

APPROACH SLAB TYPICAL

STA. 15+05.88 TO STA. 15+20.88 (T=12")
STA. 17+08.70 TO STA. 17+28.70 (T=13")

C – FOR CURB DETAILS NOT SHOWN SEE STANDARD DRAWING BP–5.1, TYPE 2–A, COST OF CURB TO BE INCLUDED WITH APPROACH SLAB.

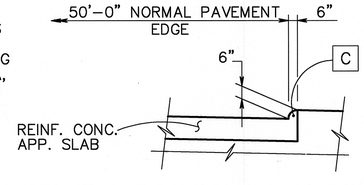

CURB ON APPROACH SLAB DETAIL

STA. 17+12 TO STA. 17+24.13 (RT.) = 12.13 LIN.FT.
STA. 17+22 TO STA. 17+33.27 (LT.) = 11.27 LIN.FT.

EXISTING LEGEND:

- (A) 6"± ASPHALT SURFACE COURSE
- (B) 3" BRICK AND 1" BINDER
- (C) 8" REINFORCED CONCRETE BASE
- (D) 4" SUBBASE
- (E) STONE CURB (6"x24")
- (F) SANDSTONE WALK
- (G) 4" UNDERDRAIN

[Created AutoCad R12] – C:\90318662.20\ACAD12C2\TYPSEC.DWG – APR 18, 1995 – 14:32:26 – SCALE = 48.00

Stokes 0031 (4:021) SFN: 1833936

GENERAL NOTES

ROUNDING
THE ROUNDING AT SLOPE BREAKPOINTS SHOWN ON THE TYPICAL SECTIONS, APPLY TO ALL CROSS–SECTIONS EVEN THOUGH OTHERWISE SHOWN ON THE PLANS.

ELEVATION DATUM
ALL ELEVATIONS ARE BASED ON U.S.G.S. DATUM.

EXISTING TYPICAL SECTIONS
EXISTING TYPICAL SECTIONS HAVE BEEN DEVELOPED FROM PAVEMENT CORES AND/OR RECORD PLANS AND ARE BELIEVED TO REPRESENT THE WIDTH AND COMPOSITION OF THE EXISTING PAVEMENT, BUT THE STATE OF OHIO DOES NOT GUARANTEE THE ACCURACY OF SAME.

UTILITIES
LISTED BELOW ARE ALL UTILITIES LOCATED WITHIN THE PROJECT CONSTRUCTION LIMITS TOGETHER WITH THEIR RESPECTIVE OWNERS:

THE ILLUMINATING CO.
6896 MILLER RD.
BRECKSVILLE, OHIO 44141
ATTN: FRANK DIBBS
PHONE (440) 546–8748
FAX (440) 546–8775
E–MAIL FRANK G. DIBBS@FIRSTENERGYCORP.COM

AMERITECH
13630 LORAIN AVE.– 4TH FLOOR
CLEVELAND, OHIO 44111
ATTN: DICK LICHT
PHONE (216) 476–6142
FAX (216) 476–6013
E–MAIL RICHARD.W.LICHT@AL.WI.AMERITECH.COM

REGIONAL TRANSIT AUTHORITY
1240 W. 6TH ST.
CLEVELAND, OHIO 44113
PHONE (216) 566–5100

CUYAHOGA COUNTY SANITARY ENGINEER
6100 WEST CANAL RD.
VALLEY VIEW, OHIO 44125
ATTN: RUTH LANGSNER
PHONE (216) 443–8204
FAX (216) 443–8236

CITY OF CLEVELAND DIVISION OF WATER
1201 LAKESIDE AVE.
CLEVELAND, OHIO 44114
ATTN: GUY SINGER
PHONE (216) 664–2444 EXT. 5555
FAX (216) 664–2378

CITY OF CLEVELAND
CLEVELAND PUBLIC POWER (MELP)
1300 LAKESIDE AVE.
CLEVELAND, OHIO 44114
ATTN: DALE TURKOVICH
PHONE (216) 664–4245 EXT. 115
FAX (216) 664–2777

CALL OHIO UTILITIES PROTECTION SERVICE 2 WORKING DAYS BEFORE YOU DIG.
TOLL FREE No.: 1–800–362–2764.

THE LOCATION OF THE UNDERGROUND UTILITIES SHOWN ON THE PLANS ARE AS OBTAINED FROM THE OWNERS AS REQUIRED BY SECTION 153.64 O.R.C.

CONTINGENCY QUANTITIES
THE CONTRACTOR SHALL NOT ORDER MATERIALS OR PERFORM WORK FOR ITEMS DESIGNATED BY PLAN NOTE TO BE USED "AS DIRECTED BY THE ENGINEER" UNLESS AUTHORIZED BY THE ENGINEER. THE ACTUAL WORK LOCATIONS AND QUANTITIES USED FOR SUCH ITEMS SHALL BE INCORPORATED INTO THE FINAL CHANGE ORDER GOVERNING COMPLETION OF THIS PROJECT.

WORK LIMITS
THE WORK LIMITS SHOWN ON THESE PLANS ARE FOR PHYSICAL CONSTRUCTION ONLY. THE INSTALLATION AND OPERATION OF ALL TEMPORARY TRAFFIC CONTROL AND TEMPORARY TRAFFIC CONTROL DEVICES REQUIRED BY THESE PLANS SHALL BE PROVIDED BY THE CONTRACTOR WHETHER INSIDE OR OUTSIDE THESE WORK LIMITS.

MANHOLES, CATCH BASINS AND INLETS REMOVED OR ABANDONED
ALL CASTINGS SHALL BE CAREFULLY REMOVED AND STORED WITHIN THE RIGHT OF WAY FOR SALVAGE BY CITY OF CLEVELAND FORCES.

PAYMENT FOR ALL OF THE ABOVE SHALL BE INCLUDED IN THE CONTRACT PRICE FOR THE PERTINENT 202 ITEM.

ITEM SPECIAL, MISCELLANEOUS METAL
EXISTING CASTINGS MAY PROVE TO BE UNSUITABLE FOR REUSE, AS DETERMINED BY THE ENGINEER. IT SHALL BE THE CONTRACTOR'S RESPONSIBILITY TO PROVIDE THE CASTINGS OF THE REQUIRED TYPE, SIZE AND STRENGTH (HEAVY OR LIGHT DUTY) FOR THE PARTICULAR STRUCTURE IN QUESTION. ALL MATERIALS SHALL MEET ITEM 604 OF THE SPECIFICATIONS AND SHALL HAVE THE PRIOR APPROVAL OF THE ENGINEER.

THE FOLLOWING ESTIMATED QUANTITY HAS BEEN CARRIED IN THE GENERAL SUMMARY FOR USE AS DIRECTED BY THE ENGINEER.

ITEM SPECIAL	MISCELLANEOUS METAL	2000 LBS.

THE CONTRACTOR IS CAUTIONED TO USE EXTREME CARE IN THE REMOVAL, STORAGE AND REPLACEMENT OF ALL EXISTING CASTINGS. CASTINGS DAMAGED BY THE NEGLIGENCE OF THE CONTRACTOR, AS DETERMINED BY THE ENGINEER, SHALL BE REPLACED WITH THE PROPER NEW CASTINGS AT THE EXPENSE OF THE CONTRACTOR.

SEEDING AND MULCHING
SEEDING AND MULCHING SHALL BE APPLIED TO ALL AREAS OF EXPOSED SOIL BETWEEN THE RIGHT–OF–WAY LINES, AND WITHIN THE CONSTRUCTION LIMITS FOR AREAS OUTSIDE THE RIGHT–OF–WAY LINES COVERED BY WORK AGREEMENT OR SLOPE EASEMENT. QUANTITY CALCULATIONS FOR ITEM 659, SEEDING AND MULCHING, ARE BASED ON THESE LIMITS.

THE FOLLOWING ESTIMATED QUANTITY HAS BEEN CARRIED TO THE GENERAL SUMMARY:

ITEM 659 – SEEDING AND MULCHING	1700	SQ.YD.
ITEM 659 – COMMERCIAL FERTILIZER	0.15	TON
ITEM 659 – AGRICULTURAL LIMING	0.35	TON

WATERING PERMANENT SEEDED AREAS
THE FOLLOWING ESTIMATED QUANTITIES ARE TO BE USED AS DIRECTED BY THE ENGINEER TO PROMOTE GROWTH AND TO CARE FOR THE TEMPORARY AND PERMANENT SEEDED AREAS, AS PER 659.09:

ITEM 659 – WATER	4	M.GAL.

REMOVAL OF TREES OR STUMPS
ALL TREES AND STUMPS SPECIFICALLY MARKED FOR REMOVAL WITHIN THE CONSTRUCTION LIMITS SHALL BE REMOVED UNDER THE LUMP SUM BID FOR ITEM 201, CLEARING AND GRUBBING. THE FOLLOWING IS AN APPROXIMATE ESTIMATE OF THE NUMBER OF TREES AND STUMPS TO BE REMOVED.

SIZE	No. OF TREES	No. OF STUMPS	TOTAL
18"	0	1	1
30"	2	0	2

TEMPORARY SOIL EROSION AND SEDIMENT CONTROL
THE FOLLOWING ESTIMATED QUANTITIES ARE TO BE USED AS DIRECTED BY THE ENGINEER FOR TEMPORARY EROSION AND SEDIMENT CONTROL MEASURES:

ITEM 877 – TEMPORARY SEEDING AND MULCHING	1700	SQ.YD.
ITEM 877 – TEMPORARY PERIMETER FILTER FABRIC FENCE	600	LIN.FT.
ITEM 659 – COMMERCIAL FERTILIZER	0.02	TON
ITEM 659 – REPAIR SEEDING AND MULCHING	85	SQ.YD.
ITEM 659 – WATER	1	M.GAL.

CROSSINGS AND CONNECTIONS TO EXISTING PIPES AND UTILITIES
WHERE PLANS PROVIDE FOR A PROPOSED CONDUIT TO BE CONNECTED TO, OR CROSS OVER OR UNDER AN EXISTING SEWER OR UNDERGROUND UTILITY, THE CONTRACTOR SHALL LOCATE THE EXISTING PIPES OR UTILITIES BOTH AS TO LINE AND GRADE BEFORE STARTING TO LAY THE PROPOSED CONDUIT.

IF IT IS DETERMINED THAT THE ELEVATION OF THE EXISTING CONDUIT, OR EXISTING APPURTENANCE TO BE CONNECTED, DIFFERS FROM THE PLAN ELEVATION OR RESULTS IN A CHANGE IN THE PLAN CONDUIT SLOPE, THE ENGINEER SHALL BE NOTIFIED BEFORE STARTING CONSTRUCTION OF ANY PORTION OF THE PROPOSED CONDUIT WHICH WOULD BE AFFECTED BY THE VARIANCE IN THE EXISTING ELEVATIONS.

IF IT IS DETERMINED THAT THE PROPOSED CONDUIT WILL INTERSECT AN EXISTING SEWER OR UNDERGROUND UTILITY IF CONSTRUCTED AS SHOWN ON THE PLAN, THE ENGINEER SHALL BE NOTIFIED BEFORE STARTING CONSTRUCTION OF ANY PORTION OF THE PROPOSED CONDUIT WHICH WOULD BE AFFECTED BY THE INTERFERENCE WITH AN EXISTING FACILITY.

PAYMENT FOR ALL THE OPERATIONS DESCRIBED ABOVE SHALL BE INCLUDED IN THE CONTRACT PRICE FOR THE PERTINENT 603 CONDUIT ITEM.

REVIEW OF DRAINAGE FACILITIES
BEFORE ANY WORK IS STARTED ON THE PROJECT AND AGAIN BEFORE FINAL ACCEPTANCE BY THE STATE, REPRESENTATIVES OF THE STATE AND THE CONTRACTOR, ALONG WITH LOCAL REPRESENTATIVES, SHALL MAKE AN INSPECTION OF ALL EXISTING SEWERS WHICH ARE TO REMAIN IN SERVICE AND WHICH MAY BE AFFECTED BY THE WORK. THE CONDITION OF THE EXISTING CONDUITS AND THEIR APPURTENANCES SHALL BE DETERMINED FROM FIELD OBSERVATIONS. RECORDS OF THE INSPECTION SHALL BE KEPT IN WRITING BY THE STATE.

ALL NEW CONDUITS, INLETS, CATCH BASINS, AND MANHOLES CONSTRUCTED AS A PART OF THE PROJECT SHALL BE FREE OF ALL FOREIGN MATTER AND IN A CLEAN CONDITION BEFORE THE PROJECT WILL BE ACCEPTED BY THE STATE.

ALL EXISTING SEWERS INSPECTED INITIALLY BY THE ABOVE MENTIONED PARTIES SHALL BE MAINTAINED AND LEFT IN A CONDITION REASONABLY COMPARABLE TO THAT DETERMINED BY THE ORIGINAL INSPECTION. ANY CHANGE IN THE CONDITION RESULTING FROM THE CONTRACTOR"S OPERATIONS SHALL BE CORRECTED BY THE CONTRACTOR TO THE SATISFACTION OF THE ENGINEER.

PAYMENT FOR ALL THE OPERATIONS DESCRIBED ABOVE SHALL BE INCLUDED IN THE CONTRACT PRICE FOR THE PERTINENT 603 CONDUIT ITEM.

ITEM 304 – AGGREGATE BASE, AS PER PLAN
THE ONLY SLAG MATERIALS PERMITTED FOR THIS ITEM SHALL BE CRUSHED, AIR–COOLED BLAST FURNACE SLAG, A MIXTURE OF CRUSHED & GRANULATE SLAGS, OR OPEN HEARTH SLAG FROM APPROVED SOURCE ON FILE AT THE LABORATORY.
ALL MATERIALS OR BLENDED MATERIALS SHALL MEET GRADATION REQUIREMENTS OF 304.02.

ANY GRANULATED SLAG MATERIAL USED SHALL MEET THESE GRADATION REQUIREMENTS IN LIEU OF 703.08.

CONTRACTION AND/OR EXPANSION JOINTS
ALTHOUGH SPECIFIC LOCATIONS OF CERTAIN CONTRACTION AND EXPANSION JOINTS HAVE BEEN DETAILED ON THIS PLAN, NO WAIVER OF THE SPECIFICATIONS IS INTENDED. PROVISION OF EXPANSION JOINTS AT ALL MAJOR STRUCTURES AND THE MAXIMUM SPACING BETWEEN CONTRACTION JOINTS SHALL, IN ALL CASES, BE IN ACCORDANCE TO STANDARD CONSTRUCTION DRAWING BP–2.2 AND THE SPECIFICATIONS.

JOINT SEALERS
ALL REFERENCES TO 705.01 OR 705.02, APPEARING ON STANDARD DRAWINGS OR ON THE PLANS, SHALL BE CONSIDERED TO READ 705.04.

DRIVEWAYS
THE FOLLOWING PAVEMENT DESIGNS ARE TO BE USED FOR BOTH THE R.T.A. SUBSTATION DRIVE (STA. 17+46, 25'L.) AND THE WOODHILL ROAD DIVERSION (STA. 17+29, 25'R.):

A.) ITEM 452 – 8" PLAIN CONCRETE ON ITEM 304 – 6" AGGREGATE BASE. CONCRETE DRIVE APRONS SHALL EXTEND TO THE BACK OF THE CONCRETE WALK ONLY.

B.) ITEM 448 – 1¼" ASPHALT CONCRETE ON ITEM 448 – 1¾" ASPHALT CONCRETE ON ITEM 408 – PRIME COAT AT 0.4 GAL./SQ.YD. ON ITEM 304 – 8" AGGREGATE BASE

THIS DESIGN SHALL BEGIN AT THE BACK OF THE CONCRETE WALK AND END WHERE THE DRIVE PROFILE MATCHES THE EXISTING GRADE.

SEE SHEET 11 FOR DRIVE PROFILES.

ITEM 614 – MAINTAINING TRAFFIC
THE CONTRACTOR SHALL MAINTAIN TRAFFIC AT ALL TIMES AND IN ACCORDANCE WITH THE REQUIREMENTS OF ITEM 614 AND THE CONSTRUCTION SEQUENCE AS SHOWN ON SHEETS 4 AND 5. TRAFFIC SHALL BE MAINTAINED BY USE OF PORTIONS OF THE EXISTING AND NEW PAVEMENT.

EXCEPT FOR THE PERMITTED NIGHT TIME CLOSURES, AT LEAST TWO LANES OF ONE–WAY TRAFFIC SHALL BE MAINTAINED DURING ALL STAGES OF CONSTRUCTION. THE MINIMUM LANE WIDTH SHALL BE 11 FEET. THE CONTRACTOR SHALL DIVERT TRAFFIC FROM NORMAL CHANNELS BY REFLECTORIZED DRUMS, FLASHING ARROW PANELS, AND TRAFFIC SIGNS AND PAVEMENT MARKINGS SHOWN IN THE MAINTENANCE OF TRAFFIC PLANS. TRAFFIC SHALL BE SEPARATED FROM THE WORK AREA BY MEANS OF REFLECTORIZED DRUMS AND ITEM 622 – PORTABLE CONCRETE BARRIER.

THE CONTRACTOR SHALL MAINTAIN SAFE AND SATISFACTORY ACCESS TO THE R.T.A. SUBSTATION.

ALL WORK AND TRAFFIC CONTROL DEVICES SHALL BE IN ACCORDANCE WITH ITEM 614 AND OTHER APPLICABLE PORTIONS OF THE SPECIFICATIONS, AS WELL AS THE OHIO MANUAL OF UNIFORM TRAFFIC CONTROL DEVICES, PAYMENT FOR ALL LABOR, EQUIPMENT AND MATERIALS SHALL BE INCLUDED IN THE LUMP SUM CONTRACT PRICE FOR ITEM 614 – MAINTAINING TRAFFIC, UNLESS SEPERATLY ITEMIZED IN THE PLANS. THE FOLLOWING ESTIMATED QUANTITIES HAVE BEEN INCLUDED IN THE GENERAL SUMMARY FOR USE AS DIRECTED BY THE ENGINEER FOR THE MAINTENANCE OF TRAFFIC:

ITEM 410 – TRAFFIC COMPACTED SURFACE, TYPE A OR B	50	CU.YD.
ITEM 614 – BITUMINOUS CONCRETE FOR MAINTAINING TRAFFIC	50	CU.YD.
ITEM 616 – CALCIUM CHLORIDE	5	TON
ITEM 616 – WATER	50	M.GAL.

[[Created AutoCad R12]] – C:\90318662.20\ACAD12C2\GENNOTE.DWG – APR 25, 1995 – 11:45:05 – SCALE = 1.00
Stokes 0031 (4:021) SFN: 1833936

GENERAL NOTES

ITEM 614–LAW ENFORCEMENT OFFICER WITH PATROL CAR

IN ADDITION TO THE REQUIREMENTS OF 614 AND THE OHIO MANUAL OF UNIFORM TRAFFIC CONTROL DEVICES (OMUTCD), A UNIFORMED OFFICER AND OFFICIAL PATROL CAR WITH WORKING TOP MOUNTED EMERGENCY FLASHING LIGHTS SHALL BE PROVIDED FOR CONTROLLING TRAFFIC FOR THE FOLLOWING TASKS:

1. FOR PERMANENT LANE CLOSURES FOR PHASE CONSTRUCTION: DURING INITIAL SETUP PERIODS, TEAR DOWN PERIODS, SUBSTANTIAL SHIFTS OF A CLOSURE POINT OR WHEN NEW LANE CLOSURE ARRANGEMENTS ARE INITIATED.
2. FOR TEMPORARY LANE CLOSURES ONLY WHEN DIRECTED BY THE ENGINEER.
3. DURING THE ENTIRE ADVANCE PREPARATION AND CLOSURE SEQUENCE WHERE COMPLETE BLOCKAGE OF TRAFFIC IS REQUIRED.

LAW ENFORCEMENT OFFICERS (L.E.O.'S) SHOULD NOT BE USED WHERE THE OMUTCD INTENDS THAT FLAGGERS BE USED. THE L.E.O.'S ARE CONSIDERED TO BE EMPLOYED BY THE CONTRACTOR AND THE CONTRACTOR SHALL BE RESPONSIBLE FOR THEIR ACTIONS. ALTHOUGH THEY ARE EMPLOYED BY THE CONTRACTOR, THE PROJECT ENGINEER SHALL HAVE CONTROL OVER THEIR PLACEMENT. THE OFFICIAL PATROL CAR SHALL BE A PUBLIC SAFETY VEHICLE AS REQUIRED BY THE OHIO REVISED CODE.

THE CONTRACTOR SHALL MAKE ARRANGEMENTS FOR THESE SERVICES WITH THE POLICE DEPARTMENT.

LAW ENFORCEMENT OFFICERS WITH PATROL CAR REQUIRED BY THE TRAFFIC MAINTENANCE TASKS ABOVE SHALL BE PAID FOR ON A UNIT PRICE (HOURLY) BASIS UNDER ITEM 614–LAW ENFORCEMENT OFFICER WITH PATROL CAR. THE FOLLOWING QUANTITIES HAVE BEEN CARRIED FORWARD TO THE GENERAL SUMMARY:

ITEM 614–LAW ENFORCEMENT OFFICER WITH PATROL CAR 100 HOURS

THE HOURS SHALL INCLUDE MINIMUM SHOW–UP TIME REQUIRED BY THE LAW ENFORCEMENT AGENCY INVOLVED.

IF CONTRACTORS WISH TO UTILIZE L.E.O.'S FOR FLAGGING AND TRAFFIC CONTROL OTHER THAN THAT REQUIRED IN THESE PLANS, THEY MAY DO SO AT THEIR OWN EXPENSE. PAYMENT FOR THE EXCESS ABOVE THE CONTRACT REQUIREMENTS WILL BE INCLUDED UNDER ITEM 614–MAINTAINING TRAFFIC.

DUST CONTROL

THE CONTRACTOR SHALL FURNISH AND APPLY WATER AND CALCIUM CHLORIDE FOR DUST CONTROL PURPOSES AS DIRECTED BY THE ENGINEER. THE FOLLOWING QUANTITIES HAVE BEEN INCLUDED IN THE GENERAL SUMMARY FOR DUST CONTROL PURPOSES:

ITEM 616 – WATER	50	M.GAL.
ITEM 616 – CALCIUM CHLORDE	2	TONS

ITEM 622 – PORTABLE CONCRETE BARRIER

IT IS ANTICIPATED THAT THE SAME BARRIER WILL BE USED IN VARIOUS PHASES OF CONSTRUCTION. MOVEMENT OF THE CONCRETE BARRIER BETWEEN PHASES SHALL BE ACCOMPLISHED IN ONE WORKING DAY. FLAGGERS SHALL BE UTILIZED FOR PROTECTION OF VEHICULAR TRAFFIC UNTIL MOVEMENT OF THE BARRIER IS COMPLETE.

ALL COSTS INVOLVED IN REMOVING AND REINSTALLING THE CONCRETE BARRIER WILL BE INCLUDED IN THE CONTRACT PRICE FOR ITEM 622–PORTABLE CONCRETE BARRIER, 32", AND ITEM 622 – PORTABLE CONCRETE BARRIER, 32", BRIDGE MOUNTED

DELINEATION OF PORTABLE CONCRETE BARRIER

SEE NOTE IN PROPOSAL REGARDING THIS ITEM OF WORK. THE FOLLOWING ITEMS HAVE BEEN INCLUDED IN THE GENERAL SUMMARY TO BE USED TO DELINEATE PORTABLE CONCRETE BARRIER FOR QUANTITIES SEE SHEET 7 OF 58:

ITEM 614 – BARRIER REFLECTOR, TYPE B2
ITEM 614 – OBJECT MARKER

SURFACE COURSE PLACEMENT

ITEM 448 – 1¼" SURFACE COURSE SHALL NOT BE PLACED FOR STAGE I CONSTRUCTION. INSTEAD THE SURFACE COURSE SHALL BE PLACED FULL ROADWAY WIDTH AS PART OF STAGE II CONSTRUCTION OPERATIONS.

CONVERSION OF METRIC STANDARD DRAWINGS

THE METRIC STANDARD DRAWINGS REFERENCED IN THIS PLAN SHALL BE CONVERTED TO ENGLISH UNITS USING THE SI (METRIC) TO ENGLISH CONVERSION FACTORS PROVIDED IN SECTION 109.011 OF THE 1997 CONSTRUCTION AND MATERIALS SPECIFICATIONS. THE APPENDIX OF ASTM E 380 SHALL BE UTILIZED FOR ANY ADDITIONAL CONVERSION FACTORS REQUIRED. CONVERSIONS SHALL BE APPROPRIATELY PRECISE AND SHALL REFLECT STANDARD INDUSTRY ENGLISH VALUES WHERE SUITABLE.

ADJUSTMENTS IN CONTRACT TIME

TIME EXTENSIONS WILL ONLY BE CONSIDERED WHEN CONTROLLING ITEMS OF WORK ON THE APPROVED CPM SCHEDULE ARE AFFECTED DUE TO NO FAULT OF THE CONTRACTOR.

WHEN ADDITIONAL WORK IS REQUIRED, TIME EXTENSIONS WILL ONLY BE GRANTED FOR CONTROLLING ITEMS ON THE CPM SCHEDULE.

PROJECT PROGRESS MEETINGS

PROGRESS MEETINGS WILL BE HELD EVERY FOUR (4) WEEKS AT THE PROJECT OFFICE OR OTHER LOCATION DESIGNATED BY THE CONSTRUCTION ENGINEER, AND ATTENDED BY O.D.O.T. AND CONTRACTOR DECISION–MAKING PERSONNEL.

THE PURPOSE OF THESE MEETINGS WILL BE TO DISCUSS CRITICAL OPERATIONS AND POTENTIAL PROBLEMS. THE CONTRACTOR WILL CONFIRM THE NUMBER AND DURATION OF WORK SHIFTS, NUMBER OF WORK CREWS, AND SPECIFIC PORTIONS OF THE WORK TO BE PERFORMED DURING THE FOLLOWING WEEKS.

THESE MEETINGS CAN ONLY BE WAIVED BY THE CONSTRUCTION ENGINEER.

ITEM 407 – TACK COAT

THE RATE OF APPLICATION OF THE 407 TACK COAT SHALL BE SUBJECT TO ADJUSTMENT AS DIRECTED BY THE ENGINEER. FOR ESTIMATING PURPOSES ONLY, THE PLAN QUANTITIES INDICATE AN AVERAGE APPLICATION RATE OF:

407, TACK COAT	0.075	GALLON PER SQ. YD.
407, TACK COAT FOR INTERMEDIATE COURSE	0.05	GALLON PER SQ. YD.

[[Created AutoCad R12]] – c:\903186820\ACAD12C2\GENNOTE.DWG – APR 25, 1995 – 11:45:05 – SCALE = 1.00

Stokes 0031 (4:021) SFN: 1833936

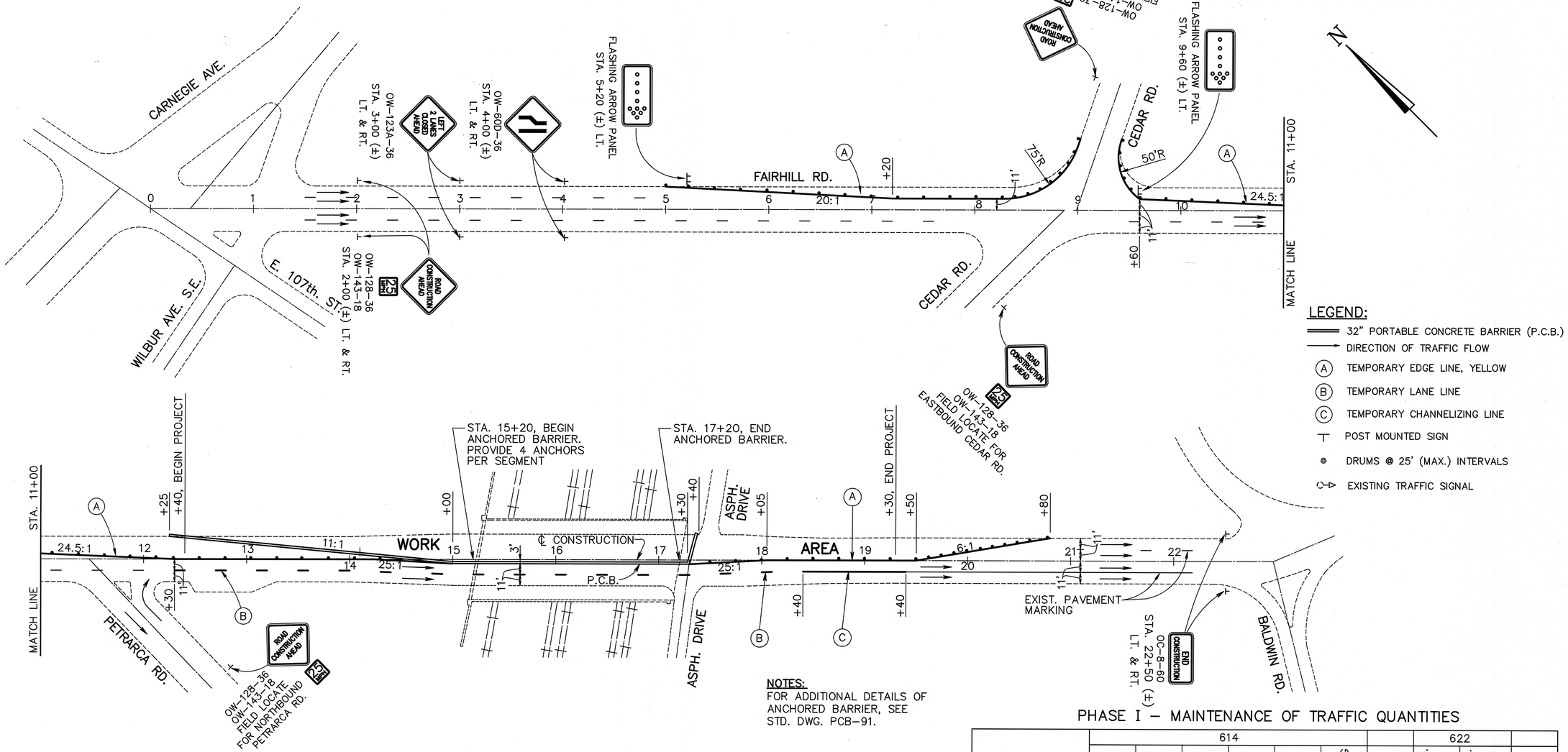

NOTES:
FOR ADDITIONAL DETAILS OF ANCHORED BARRIER, SEE STD. DWG. PCB–91.

PHASE I

0 50 100 200 300
SCALE IN FEET

PHASE I – MAINTENANCE OF TRAFFIC QUANTITIES

STATION	614							622		
	BARRIER REFLECTOR TYPE B–2	OBJECT MARKER	TEMPORARY EDGE LINE *	TEMPORARY EDGE LINE **	TEMPORARY LANE LINE *	TEMPORARY CHANNELIZING LINE *		PORT. CONC. BARRIER, 32"	PORT. CONC. BARRIER, 32", BRIDGE MOUNTED	
FROM – TO	EACH	EACH	LIN.FT.	LIN.FT.	LIN.FT.	LIN.FT.		LIN.FT.	LIN.FT.	
5+00 – 12+30				750						
12+30 – 15+00			270							
17+30 – 19+40			210							
19+40 – 19+72				41						
12+30 – 18+40					610					
12+55 – 17+40	8	9						335	200	
18+40 – 19+40						100				
TOTAL	8	9	480	791	610	100		335	200	
		MILES	0.09	0.15	0.12					

* CLASS I, 642 PAINT
** CLASS I, 740.06, TYPE I

PHASE I – MAINTENANCE OF TRAFFIC

[[Created AutoCad R12]] – C:\90318662.20\ACAD12C2\TRAFFIC1.DWG – APR 19, 1995 – 09:19:20 – SCALE = 50.00
Stokes 0031 (4:021) SFN: 1833936

CALC. BY V.S. DATE 10/93	CUYAHOGA COUNTY	OHIO	5 / 58
CHKD. BY T.H. DATE 10/93	CUY–FAIRHILL ROAD	FHWA REGION 5	

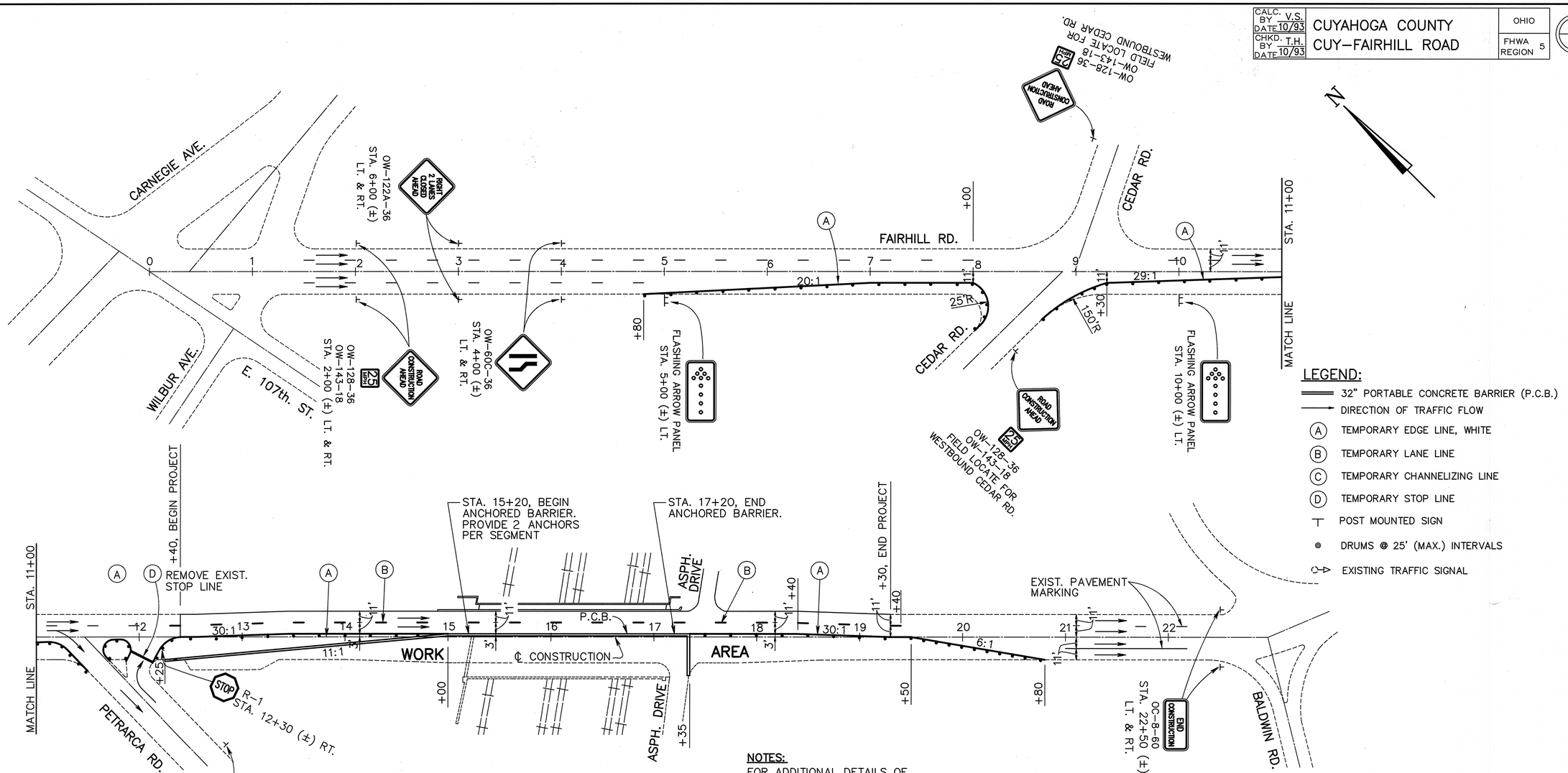

LEGEND:

- 32" PORTABLE CONCRETE BARRIER (P.C.B.)
- DIRECTION OF TRAFFIC FLOW
- (A) TEMPORARY EDGE LINE, WHITE
- (B) TEMPORARY LANE LINE
- (C) TEMPORARY CHANNELIZING LINE
- (D) TEMPORARY STOP LINE
- POST MOUNTED SIGN
- DRUMS @ 25' (MAX.) INTERVALS
- EXISTING TRAFFIC SIGNAL

NOTES:
FOR ADDITIONAL DETAILS OF ANCHORED BARRIER, SEE STD. DWG. PCB–91.

PHASE II

0 50 100 200 300
SCALE IN FEET

PHASE II – MAINTENANCE OF TRAFFIC QUANTITIES

STATION	614							622		
	BARRIER REFLECTOR TYPE B–2	OBJECT MARKER	TEMPORARY EDGE LINE **	TEMPORARY LANE LINE **	TEMPORARY STOP LINE **			PORT. CONC. BARRIER, 32"	PORT. CONC. BARRIER, 32", BRIDGE MOUNTED	
FROM – TO	EACH	EACH	LIN.FT.	LIN.FT.	LIN.FT.			LIN.FT.	LIN.FT.	
4+80 – 19+72			1290							
12+30 – 19+40				710						
12+25 – 17+35	8	9						355	200	
12+00					30					
TOTAL	8	9	1290	710	30			355	200	
		MILES	0.24	0.13						

** CLASS I, 740.06, TYPE I

PHASE II – MAINTENANCE OF TRAFFIC

[[Created AutoCad R12]] – C:\90318662.20\ACAD12C2\TRAFFIC2.DWG – APR 19, 1995 – 10:17:16 – SCALE = 50.00

Stokes 0031 (4:021) SFN: 1833936

CALC. BY D.P. DATE 8/00	CUYAHOGA COUNTY	OHIO
CHKD. BY W.M. DATE 8/00	CUY–STOKES BLVD.	FHWA REGION 5

5A
58

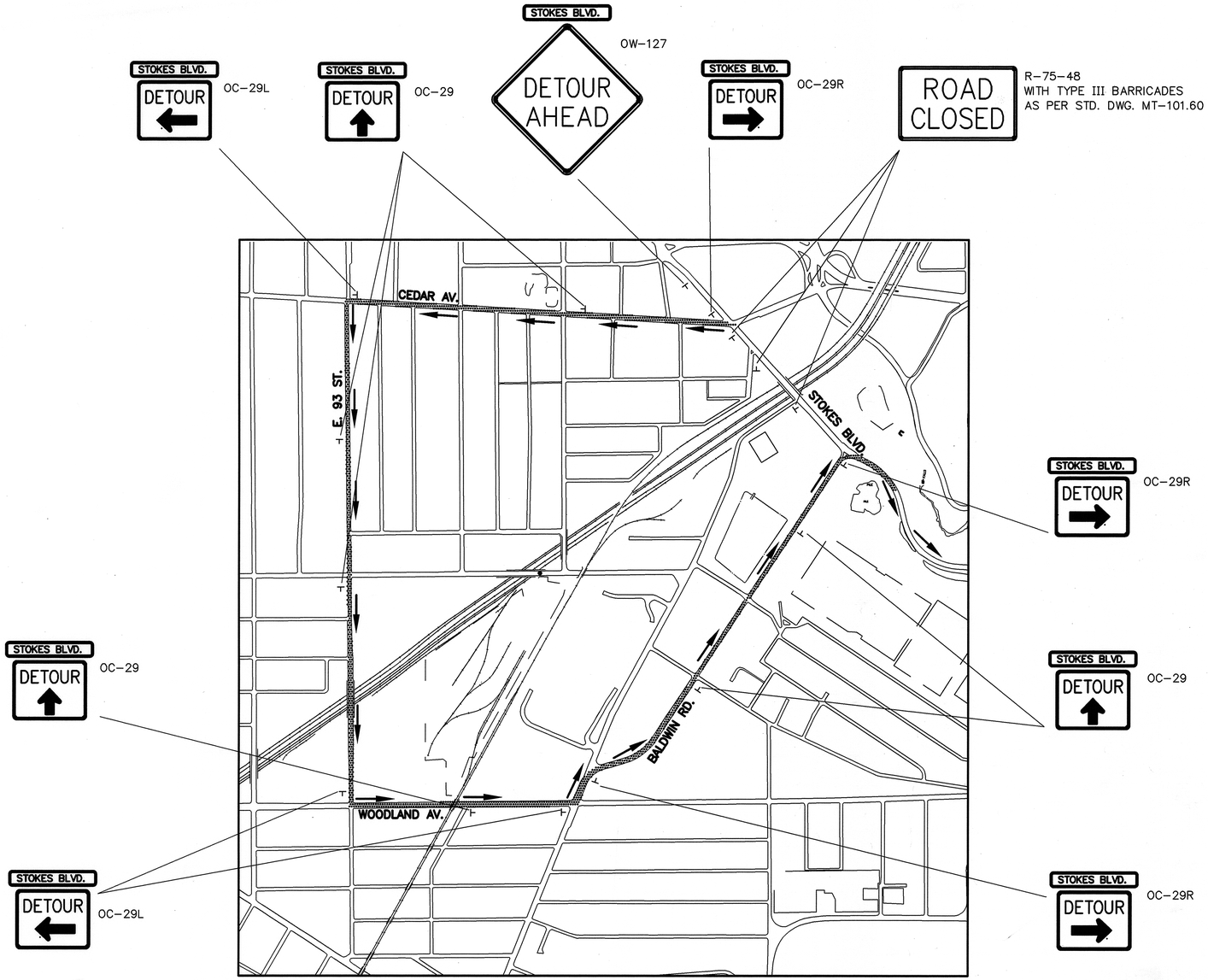

NIGHT TIME DETOUR PLAN

LIMITED CLOSING OF BRIDGE FOR NIGHT WORK

DURING THE TERM OF THIS CONTRACT, THE CONTRACTOR SHALL BE PERMITTED TO CLOSE THE BRIDGE AND DETOUR TRAFFIC FOR A MAXIMUM OF 15 NIGHT TIME PERIODS FOR ACTIVE CONSTRUCTION WORK INCLUDING SUPERSTRUCTURE REMOVALS, STRUCTURAL STEEL ERECTION, AND PLACEMENT OF CONCRETE FOR THE BRIDGE DECK. A NIGHT TIME PERIOD SHALL BE DEFINED AS THE TIME PERIOD BETWEEN 9 P.M. AND 6 A.M.

ALL COSTS ASSOCIATED WITH PROVIDING THE DETOUR SHALL BE INCLUDED UNDER ITEM 614–MAINTAINING TRAFFIC.

TRAFFIC CONTROL DEVICES LOCATED OUTSIDE OF THE LIMITS OF CONSTRUCTION

IN ADDITION TO THE REQUIREMENTS OF 614.05 OF THE CMS, THE CONTRACTOR SHALL FURNISH, ERECT, MAINTAIN, AND SUBSEQUENTLY REMOVE SUCH ADDITIONAL TRAFFIC CONTROL DEVICES LOCATED OUTSIDE OF THE LIMITS OF CONSTRUCTION AS ARE REQUIRED ON HIGHWAYS WHICH ARE USED AS DETOURS, INCLUDING THE ROAD CLOSED SIGNS UPON THE BARRICADES AT THE POINT WHERE THE HIGHWAY IS CLOSED.

Stokes 0031 (4:021) SFN: 1833936

GENERAL SUMMARY

CALC. BY V.S. DATE 10/93 | CHKD. BY T.H. DATE 10/93 | CUYAHOGA COUNTY CUY–FAIRHILL ROAD | OHIO FHWA REGION 5 | 6 58

PAVEMENT CALCULATIONS

ITEM 448 ASPHALT CONCRETE, SURFACE COURSE, TYPE 1

(1240.00 – 1230.00) x 44.0 = 440 S.F.
(1255.00 – 1240.00) x 44.0 = 660 S.F.
(1345.00 – 1255.00) x 47.0 = 4230 S.F.
(1505.88 – 1345.00) x 50.0 = 8044 S.F.
(1840.00 – 1733.70) x 50.0 = 5315 S.F.
(1930.00 – 1840.00) x 47.0 = 4230 S.F.
(1940.00 – 1930.00) x 44.0 = 440 S.F.

23359 S.F. x 1.25"/12 ÷ 27 = 90.1 C.Y.
TOTAL 404 = 90 C.Y.

ITEM 448 ASPHALT CONCRETE, INTERMEDIATE COURSE,TYPE 2

FROM ITEM 404: 23359 S.F. x 1.75"/12 ÷ 27 = 126.2 C.Y.
TOTAL 402 = 126 C.Y.

ITEM 407 TACK COAT

FROM ITEM 404: 23359 S.F. ÷ 9 x 0.075 GAL/S.Y. = 194.7 GAL.
TOTAL 407 = 195 GAL.

ITEM 407 TACK COAT FOR INTERMEDIATE COURSE

FROM ITEM 404: 23359 S.F. ÷ 9 x 0.05 GAL/S.Y. = 129.8 GAL.
TOTAL 407 = 130 GAL.

ITEM 305 9" CONCRETE BASE

(1255.00 – 1240.00) x 44.0 = 660 S.F.
(1300.00 – 1255.00) x 45.0 = 2025 S.F.
(1345.00 – 1300.00) x 48.0 = 2160 S.F.
(1428.00 – 1345.00) x 49.5 = 4109 S.F.
(1490.45 – 1432.00) x 49.5 = 2894 S.F.
(1505.88 – 1490.45) x 49.0 = 757 S.F.
(1798.00 – 1733.70) x 50.0 = 3215 S.F.
(1840.00 – 1802.00) x 50.0 = 1900 S.F.
(1930.00 – 1840.00) x 47.0 = 4230 S.F.

21950 S.F. ÷ 9 = 2438.89 S.Y.
TOTAL 305 = 2439 S.Y.

ITEM 611 REINFORCED CONCRETE APPROACH SLAB

(1520.88 – 1505.88) x 49.0 = 735 S.F. ÷ 9 = 82 S.Y. (T=12")
(1728.70 – 1708.70) x 49.0 = 980 S.F. ÷ 9 = 109 S.Y.
(12.13 + 11.27) X 1.5 = 35 S.F. ÷ 9 = 4 S.Y.
113 S.Y. (T=13")

ITEM 203 SUBGRADE COMPACTION

(1255.00 – 1240.00) x 45.0 = 675 S.F.
(1300.00 – 1255.00) x 46.5 = 2093 S.F.
(1345.00 – 1300.00) x 51.75 = 2329 S.F.
(1490.45 – 1345.00) x 52.5 = 7636 S.F.
(1520.88 – 1490.45) x 54.0 = 1644 S.F.
(1733.70 – 1708.70) x 52.5 = 1313 S.F.
(1840.00 – 1733.70) x 51.0 = 5422 S.F.
(1930.00 – 1840.00) x 48.0 = 4320 S.F.

25432 S.F. ÷ 9 = 2825.78 S.Y.
TOTAL 203 = 2826 S.Y.

ITEM 304 AGGREGATE BASE, AS PER PLAN

(1255.00 – 1240.00) x 45.0 = 675 S.F.
(1300.00 – 1255.00) x 46.5 = 2093 S.F.
(1345.00 – 1300.00) x 51.75 = 2329 S.F.
(1426.00 – 1345.00) x 52.5 = 4253 S.F.
(1490.45 – 1434.00) x 52.5 = 2964 S.F.
(1520.88 – 1490.45) x 54.0 = 1644 S.F.
(1733.70 – 1708.70) x 52.5 = 1313 S.F.
(1796.00 – 1733.70) x 51.0 = 3177 S.F.
(1840.00 – 1804.00) x 51.0 = 1836 S.F.
(1930.00 – 1840.00) x 48.0 = 4320 S.F.

24604 S.F. x 6"/12 = 12302 C.F.
÷ 27 = 455.63 C.Y.
TOTAL 310 = 456 C.Y.

ITEM 609 CURB, TYPE 2–B

1490.45 – 1240.00 = 250.45 LIN.FT.
1930.00 – 1738.27 = 191.73 LIN.FT.
1300.00 – 1240.00 = 60.00 LIN.FT.
1930.00 – 1729.13 = 200.87 LIN.FT.
TOTAL 609 = 703.05 LIN.FT.

TOTAL 609 = 703 L.F.

ITEM SPECIAL PRESSURE RELIEF JOINT, TYPE A

2 x 51.0 = 102 L.F.

ITEM	SHEET NUMBERS								PARTICIPATION			ITEM	ITEM EXT.	GRAND TOTAL	UNIT	DESCRIPTION	AS PER PLAN SHEET REF.
	3	6	7	8	9	13A										* MISC.: ⊙ (MISC. HT.)	
																ROADWAY	
201												201	11000	LUMP	LUMP	CLEARING AND GRUBBING	
202			2603									202	23000	2603	SQ.YD.	PAVEMENT REMOVED	
202			6263									202	30000	6263	SQ.FT.	WALK REMOVED	
202			990									202	32000	990	LIN.FT.	CURB REMOVED	
202				27	129							202	35100	156	LIN.FT.	PIPE REMOVED, 24" AND UNDER	
202				1								202	58000	1	EACH	MANHOLE REMOVED	
202					3							202	58100	3	EACH	CATCH BASIN REMOVED	
202						338						202	75000	338	LIN.FT.	FENCE REMOVED	
202						2						202	75250	2	EACH	GATE REMOVED	
203				12	27							203	12000	39	CU.YD.	EXCAVATION NOT INCLUDING EMBANKMENT CONSTRUCTION	
203				1006	1704							203	20000	2710	CU.YD.	EMBANKMENT	
203		2826										203	50000	2826	SQ.YD.	SUBGRADE COMPACTION	
607						100						607	20000	100	LIN.FT.	FENCE, TYPE CL	
607						70						607	20100	70	LIN.FT.	FENCE, TYPE CL, * 6' HT.	
607						225						607	20100	225	LIN.FT.	FENCE, TYPE CL, * 7' HT. WITH BARBED WIRE	
607						1						607	50902	1	EACH	GATE, TYPE CL, ⊙ 6' HT.	
607						1						607	50902	1	EACH	GATE, TYPE CL, ⊙ 7' HT. WITH BARBED WIRE	
608				2696	3310							608	10000	6006	SQ.FT.	4" CONCRETE WALK	
622				175	116							622	24001	291	LIN.FT.	CONCRETE BARRIER, TYPE D, AS PER PLAN	2
																EROSION CONTROL	
659	1700											659	10000	1700	SQ.YD.	SEEDING AND MULCHING	
659	85											659	14000	85	SQ.YD.	REPAIR SEEDING AND MULCHING	
659	0.17											659	20000	0.17	TON	COMMERCIAL FERTILIZER	
659	0.35											659	30000	0.35	TON	AGRICULTURAL LIMING	
659	5											659	35000	5	M.GAL.	WATER	
877	1700											877	10000	1700	SQ.YD.	TEMPORARY SEEDING AND MULCHING	
877	600											877	30100	600	LIN.FT.	TEMPORARY PERIMETER FILTER FABRIC FENCE	
																DRAINAGE	
603				40	40							603	01500	80	LIN.FT.	6" CONDUIT, TYPE F, 707.41 NON–PERFORATED ASTM 3034 SDR 35 OR 707.42 OR 707.33	
603				58	64							603	04400	122	LIN.FT.	12" CONDUIT, TYPE B, 706.01, 706.02 OR 706,08	
603					71							603	04600	71	LIN.FT.	12" CONDUIT, TYPE C, 706.01, 706.02 OR 706.08	
604				3	2							604	00300	5	EACH	CITY OF CLEVELAND, No.1 CATCH BASIN	
604					1							604	00301	1	EACH	CITY OF CLEVELAND, No.1 CATCH BASIN, AS PER PLAN	13A
604				1								604	31500	1	EACH	MANHOLE, No. 3	
604					2							604	35500	2	EACH	MANHOLE RECONSTRUCTED TO GRADE	
SPEC	2000											SPEC	60450000	2000	POUND	MISCELLANEOUS METAL	
605					104							605	11100	104	LIN.FT.	6" SHALLOW PIPE UNDERDRAIN, 707.41 OR 707.32 TYPE CP	
605				411	412							605	11110	823	LIN.FT.	6" SHALLOW PIPE UNDERDRAIN WITH FABRIC WRAP	
605				14								605	13300	14	LIN.FT.	6" UNCLASSIFIED PIPE UNDERDRAIN	
																PAVEMENT	
254			98									254	01000	98	SQ.YD.	PAVEMENT PLANING, BITUMINOUS	
254			50									254	01600	50	SQ.YD.	PATCHING PLANED SURFACE	
304					43							304	20000	43	CU.YD.	AGGREGATE BASE	
304		456										304	20001	456	CU.YD.	AGGREGATE BASE, AS PER PLAN	3
305		2439										305	13000	2439	SQ.YD.	9" CONCRETE BASE	
407		195										407	10000	195	GALLON	TACK COAT	
407		130										407	14000	130	GALLON	TACK COAT FOR INTERMEDIATE COURSE	
408					54							408	10000	54	GALLON	BITUMINOUS PRIME COAT	
448					7							448	46024	7	CU.YD.	ASPHALT CONCRETE, INTERMEDIATE COURSE, TYPE 2, PG64–22 (DRIVEWAYS)	
448		126										448	46050	126	CU.YD.	ASPHALT CONCRETE, INTERMEDIATE COURSE, TYPE 2, PG64–22	
448		90										448	47020	90	CU.YD.	ASPHALT CONCRETE, SURFACE COURSE, TYPE 1, PG64–22	
448					5							448	48020	5	CU.YD.	ASPHALT CONCRETE, SURFACE COURSE, TYPE 1, PG64–22 (DRIVEWAYS)	
SPEC		102										SPEC	45130000	102	LIN.FT.	PRESSURE RELIEF JOINT, TYPE A	
452					16							452	12000	16	SQ.YD.	8" PLAIN CONCRETE PAVEMENT	
611		82										611	10000	82	SQ.YD.	REINFORCED CONCRETE APPROACH SLAB (T=12")	
611		142										611	15000	113	SQ.YD.	REINFORCED CONCRETE APPROACH SLAB (T=13")	
830		703										830	16000	703	LIN.FT.	CURB, TYPE 2–B	

[[Created AutoCad R12]] – C:\90318662.20\ACAD12C2\GENSUM1.DWG – APR 26, 1995 – 13:55:10 – SCALE = 1.00

SFN: 1833936 Stokes 0031 (4:021)

GENERAL SUMMARY

CALC. BY V.S. DATE 10/93 | CHKD. BY T.H. DATE 10/93 | CUYAHOGA COUNTY CUY–FAIRHILL ROAD | OHIO | FHWA REGION 5 | 7 / 58

PAVEMENT CALCULATIONS

ITEM 202 PAVEMENT REMOVED

STA.12+40.00 TO STA.15+21	160 x 44	= 7040 S.F.
	75 x 47	= 3525 S.F.
	46 x 50	= 2300 S.F.
PARKING AREA	(85 + 55) ÷2 x 10	= 700 S.F.
STA.17+21 TO STA.19+30.00	66 x 50	= 3300 S.F.
	76 x 47	= 3572 S.F.
	68 x 44	= 2992 S.F.
		23429 S.F. ÷9" = 2603.22 S.Y.
		TOTAL 202 = 2603 S.Y.

ITEM 202 CURB REMOVED

(1521 – 1240.00) x 2	= 562 L.F.
PARKING AREA (12+55+26–85)	= 8 L.F.
(1930.00 – 1720) x 2	= 420 L.F.
	990 L.F.
	TOTAL 202 = 990 L.F.

ITEM 254 PAVEMENT PLANING, BITUMINOUS

(1240.00 – 1230.00) x 44	= 440 S.F.
(1940.00 – 1930.00) x 44	= 440 S.F.
	880 S.F. ÷9" = 97.78 S.Y.
	TOTAL 254 = 98 S.Y.

ITEM 254 PATCHING PLANED SURFACE

(1240.00 – 1230.00) x 44 x 50%	= 220 S.F.
(1940.00 – 1930.00) x 44 x 50%	= 220 S.F.
	440 S.F. ÷9" = 48.89 S.Y.
	TOTAL 254 = 50 S.Y.

ITEM 202 – WALK REMOVED

SHEET No.	REFERENCE NO.	STATION FROM	STATION TO	SIDE	202 WALK REMOVED SF
8	1SW	12+40	14+75	LT	1410
8	2SW	12+40	14+75	RT	1781
9	1SW	14+75	15+21	LT	276
9	2SW	14+75	15+21	RT	276
9	3SW	17+20	19+30	LT	1260
9	4SW	17+20	19+30	RT	1260
TOTAL TO GENERAL SUMMARY =					6263

ITEM	SHEET NUMBERS 3	4	5	30	30C	PARTICIPATION	ITEM	ITEM EXT.	GRAND TOTAL	UNIT	* CONVENTIONAL DESCRIPTION	AS PER PLAN SHEET REF.
											LIGHTING	
202				1			202	75400	1	EACH	LIGHT POLE REMOVED	
202				1			202	75500	1	EACH	LIGHT POLE FOUNDATION REMOVED	
202				7			202	75504	7	EACH	LUMINAIRE REMOVED FOR STORAGE	
202				7			202	98100	7	EACH	REMOVAL, MISC.: WOOD LIGHT POLE REMOVED FOR STORAGE	
603				80			603	00400	80	LIN.FT.	4" CONDUIT, TYPE E	
625				13			625	00500	13	EACH	CONNECTOR KIT, TYPE II	
625				13			625	00600	13	EACH	CONNECTOR KIT, TYPE III	
625				4			625	01500	4	EACH	CABLE SPLICING KIT	
625				11			625	10500	11	EACH	LIGHT POLE, MISC.: DESIGN A10B35, FIBERGLASS	
625				2			625	10500	2	EACH	LIGHT POLE, MISC.: DESIGN A6B35, FIBERGLASS	
625				8			625	10610	8	EACH	LIGHT POLE ANCHOR U–BOLTS	
625				9			625	14100	9	EACH	LIGHT POLE FOUNDATION, 24" X 8' DEEP	
625				3280			625	23200	3280	LIN.FT.	NO. 4 AWG 5000 VOLT DISTRIBUTION CABLE	
625				1284			625	23400	1284	LIN.FT.	NO. 10 AWG POLE AND BRACKET CABLE	
625				428			625	25400	428	LIN.FT.	CONDUIT, 2", 713.04	
625				924			625	25403	924	LIN.FT.	CONDUIT, 2", 713.07, TYPE EB, AS PER PLAN	28
625				70			625	25503	70	LIN.FT.	CONDUIT, 3", 713.07, TYPE EB, AS PER PLAN	28
625				4			625	29920	4	EACH	STRUCTURE JUNCTION BOX	
625				13			625	26250	13	EACH	LUMINAIRE* STYLE B, TYPE III, 250 WATT HIGH PRESSURE SODIUM, 713.11, 480 VOLT	
											WITH PHOTOCELL	
625				1090			625	29002	1090	LIN.FT.	TRENCH, 24" DEEP	
625				5			625	31600	5	EACH	PULLBOX, MISC.: POLYMER 30"x18"x24" DEEP	
625				9			625	32000	9	EACH	GROUND ROD	
625				1			625	33001	1	EACH	STRUCTURE GROUNDING SYSTEM, AS PER PLAN	28
625				2			625	34001	2	EACH	POWER SERVICE, AS PER PLAN	29
											ALTERNATE BID	
625				11			625	10500	11	EACH	LIGHT POLE, MISC.: DESIGN A10B35, SHAKESPEARE NUMBER AH35–995CB0101, FIBERGLASS	28
625				2			625	10500	2	EACH	LIGHT POLE, MISC.: DESIGN A6B35, SHAKESPEARE NUMBER AH35–995CB0101, FIBERGLASS	28
											C.P.P. RELOCATION WORK	
625					2		625	98000	2	EACH	LIGHTING, MISC.: REINFORCED CONCRETE MANHOLE	30A
625					110		625	98100	110	LIN.FT.	LIGHTING, MISC.: CONCRETE ENCASED CONDUIT BANKS	30A
625					185		625	98100	185	LIN.FT.	LIGHTING, MISC.: NON–ENCASED, BRIDGE SUPPORTED 5–INCH FIBERGLASS REINFORCED CONDUIT BANK	
											TRAFFIC CONTROL	
642				0.42			642	00202	0.42	MILE	LANE LINE, TYPE 2	
642				160			642	00402	160	LIN.FT.	CHANNELIZING LINE, TYPE 2	
642				30			642	00502	30	LIN.FT.	STOP LINE, TYPE 2	
642				2			642	01302	2	EACH	LANE ARROW, TYPE 2	
											MAINTENANCE OF TRAFFIC	
410	50						410	12000	50	CU.YD.	TRAFFIC COMPACTED SURFACE, TYPE A OR B	
614							614	11100	100	HOUR	LAW ENFORCEMENT OFFICER WITH PATROL CAR	
614	50						614	13000	50	CU.YD.	BITUMINOUS CONCRETE FOR MAINTAINING TRAFFIC	
614			8	8			614	13302	16	EACH	BARRIER REFLECTOR, TYPE B2	
614			9	9			614	13350	18	EACH	OBJECT MARKER	
614		0.12					614	20100	0.12	MILE	TEMPORARY LANE LINE, CLASS I, 642 PAINT	
614				0.13			614	20200	0.13	MILE	TEMPORARY LANE LINE, CLASS I, 740.06, TYPE I	
614		0.09					614	22100	0.09	MILE	TEMPORARY EDGE LINE, CLASS I, 642 PAINT	
614		0.15	0.24				614	22200	0.39	MILE	TEMPORARY EDGE LINE, CLASS I, 740.06, TYPE I	
614		100					614	23200	100	LIN.FT.	TEMPORARY CHANNELIZING LINE, CLASS I, 642 PAINT	
614			30				614	26400	30	LIN.FT.	TEMPORARY STOP LINE, CLASS I, 740.06, TYPE I	
616	100						616	10000	100	M.GAL.	WATER	
616	7						616	20000	7	TON	CALCIUM CHLORIDE	
622		335	355				622	40020	690	LIN.FT.	PORTABLE CONCRETE BARRIER, 32"	
622		200	200				622	40040	400	LIN.FT.	PORTABLE CONCRETE BARRIER, 32", BRIDGE MOUNTED	
											STRUCTURE OVER 20 FT. SPAN, SEE SHEET 37 OF 58	
											FOR WATERWORK SUMMARY, SEE SHEET 16 OF 58	
614							614	11000	LUMP		MAINTAINING TRAFFIC	
623							623	10000	LUMP		CONSTRUCTION LAYOUT STAKES	
624							624	10000	LUMP		MOBILIZATION	
806							806	16010	16	MONTH	FIELD OFFICE, TYPE B	

[[Created AutoCad R12]] – C:\90318662.20\ACAD12C2\GENSUM2.DWG – APR 26, 1995 – 13:51:35 – SCALE = 1.00
SFN: 1833936
Stokes 0031 (4:021)

CALC. BY V.S. DATE 10/93	CUYAHOGA COUNTY	OHIO
CHKD. BY T.H. DATE 10/93	CUY – FAIRHILL ROAD	FHWA REGION 5

8
58

BENCHMARK: ELEV. 707.944
O.M. #X–15 – APPROX. 26 FT. S.W. OF ℄ OF FAIRHILL RD. AND 30 FT. S. OF ℄ OF CEDAR AVE. 31.35 FT. S.W. OF DRILL HOLE IN STONE MON. IN BOX AT ℄ INTERSECTION.

BEGIN PROJECT STA. 12+40.00

STA. 11+47.38, ℄ FAIRHILL RD. = STA. 0+00.00, ℄ PETRARCA RD.

PLANE & FEATHER TO MEET EXIST.

STA. 12+40 BEGIN 4" CONC. WALK BEGIN TYPE 2–B CURB

STA. 12+55 (22.0'L.) BEGIN PAVEMENT TAPER

STA. 13+45 (25.0'L.) END PAVEMENT TAPER

EXIST. LIGHT POLE FOUNDATION (TO BE REMOVED)

EXIST. LIGHT POLE (TO BE REMOVED)

CONSTRUCTION LIMITS

18" STUMP

C.E.I. 6–4" DUCTS

#88439ø

#88440

VENT

30:1 TAPER

U.D. CONN. EXIST.

BUTT JOINT, SEE SHEET 2.

48" W

6–C.P.P. DUCTS

STOKES BLVD.

℄ SURVEY & CONSTRUCTION

S 41° 47' 50" E

12" STM.

12" W

6" W

36" W

W.V.

W.M.H.

W.M. M.H.

F.H.

C.E.I. M.H.

2–STORY FRAME BUILDING

1–STORY BRICK BLDG.

BLDG. ROOF @ GROUND LEVEL BILLBOARD

PETRARCA RD.

15" STM.

12" W

36" W

STA. 12+80 BEGIN SIDEWALK TAPER

STA. 13+00 BEGIN 20' CONC. BARRIER TERMINAL, END TYPE 2–B CURB

STA. 13+20 END SIDEWALK TAPER

STA. 14+75

MATCH LINE

BEGIN WORK STA. 12+00.00

LEGEND:

ITEM 254 – PAVEMENT PLANING, BITUMINOUS AND ITEM 254 – PATCHING PLANED SURFACE

FOR WATERWORK NOTES, QUANTITIES AND DETAILS, SEE SHEETS 15 THRU 27.

FOR FENCE WORK AND QUANTITIES, SEE SHEET 13A.

718.53 719.03 719.29 720.36 721.81 723.37 725.07 726.13 726.85 728.55 730.09 731.48 732.73

STA. 12+56 (5.0'L.) EXIST. MANHOLE TO BE REMOVED

STA. 12+56 (22.0'L.) EXIST. CATCH BASIN TO BE REMOVED CITY OF CLEVELAND No.1 CATCH BASIN T/G = 718.72

P.V.C. 12+55

STA. 12+58 (22.0'R.) EXIST. CATCH BASIN TO BE REMOVED CITY OF CLEVELAND No.1 CATCH BASIN T/G = 718.83

STA. 14+70 (25.0'L.) EXIST. CATCH BASIN TO BE REMOVED CITY OF CLEVELAND No. 1 CATCH BASIN T/G = 731.80

110' VERTICAL CURVE EXCEEDS DESIGN SPEED

340' VERTICAL CURVE EXCEEDS DESIGN SPEED

STA. 12+30, MEET EXISTING

+5.14% +5.14% +5.14% +7.31%

714.40(±) 714.50(±) 728.28(±)

12" WATER 2–48" WATER 6" WATER 2–48" WATER 36" WATER 12"STM

STA. 12+56 (10.0'R.) No.3 MANHOLE LID AT 11.0'R. T/C = 719.13 INV.12" = 707.66(±)

P.V.I. STA. 13+10 ELEV. 722.12

P.V.R.C. 13+66

EXCAVATION = 12 C.Y.
EMBANKMENT = 1006 C.Y.

750 740 730 720 710 700 690 680 670

716.47 719.04 721.61 724.16 726.86 729.60

10 11 12 13 14

* 707.41 NON–PERFORATED ASTM 3034 SDR 35 OR 707.42 OR 707.33

ESTIMATED QUANTITIES

| | | |

CALC. BY V.S. DATE 10/93
CHKD. BY T.H. DATE 10/93

CUYAHOGA COUNTY
CUY – FAIRHILL ROAD

OHIO
FHWA REGION 5

9
58

LEGEND:

ITEM 254 – PAVEMENT PLANING, BITUMINOUS AND ITEM 254 – PATCHING PLANED SURFACE

STA. 14+75

MATCH LINE

STA. 14+90.45 (25.0'L.) BEGIN 20' CONCRETE BARRIER TERMINAL END TYPE 2–B CURB

STA. 15+26 (37.0'L.) EXIST. WATER MANHOLE (TO BE REMOVED)

C.E.I. OVERHEAD TRANSMISSION LINE

C.P.P. OVERHEAD TRANSMISSION LINE

CONSTRUCTION LIMITS

C.E.I. 8–4" DUCTS

C.E.I. M.H. #672537

STA. 15+03.85 TYPE A PRESSURE RELIEF JOINT

STOKES BLVD. S 41°47'50" E

STA. 15+20.88 END APP. SLAB

CITY OF CLEVELAND BRIDGE No. 4:021C

O.B.T. 9 MTD.

C.E.I. 11–4" DUCTS

EXIST. CRIBWALL

2–48", 1–36" WATER

STA. 17+08.70 BEGIN APP. SLAB

C.E.I. M.H. #88443

C.P.P. M.H.

EXIST. CONC. ENCASED 2–WAY DUCT BANK ON BRIDGE

EXIST. VINYL COATED CHAIN LINK FENCE

CSX No. 1 TRACK

CSX No. 2 TRACK

N. & S. W.B. TRACK

N. & S. E.B. TRACK

R.T.A. E.B. TRACK

R.T.A. W.B. TRACK

C.E.I. TOWER #2636

DENSE TREES

STA. 17+13.27 (25.0'L.) BEGIN 20' CONCRETE BARRIER TERMINAL

STA. 17+22.00 (25.0'L.) BEGIN TYPE 2–B CURB

STA. 17+27 (36.0'L.) EXIST. WATER MANHOLE (TO BE REMOVED)

STA. 17+46 15' ASPH. DR. W/CONC. APRON

7' CONC. WALK

STA. 18+40 (25.0'L.) BEGIN PAVEMENT TAPER

STA. 19+30 END 4" CONCRETE WALK END PAVEMENT TAPER (22.0'L.) END TYPE 2–B CURB

C.E.I. M.H. #88524

8" VENT

O.B.T. M.H.

F.H.

C.E.I. 4–4½" DUCTS

30:1 TAPER

U.D. CONN. EXIST.

C.E.I. 6–4" DUCTS

19–C.E.I. 6–4" DUCTS

BUTT JOINT, SEE SHEET 2.

STA. 17+30.67 TYPE A PRESSURE RELIEF JOINT

12"STM.

6–C.P.P. DUCTS

36" MAPLE

30" MAPLE

#88525 (CPP)

BC TRANSITION BARRIER TO HEIGHT = 0" CENTER OF BARRIER CURVES AT STA. 17+09.91, 32.0'R. AND STA. 17+22.27, 32.0'L.

CONSTRUCTION LIMITS

END PROJECT STA. 19+30

STA. 14+86 (10.0'R.) EXIST. MANHOLE RECONSTRUCT TO GRADE T/C = 733.02

STA. 14+88 (23.0'R.) EXIST. CATCH BASIN TO BE REMOVED CITY OF CLEVELAND No. 1 CATCH BASIN T/G = 732.68

STA. 17+04.13 (25.0'R.) BEGIN 20' CONCRETE BARRIER TERMINAL

STA. 17+12.00 (25.0'R.) BEGIN TYPE 2–B CURB

STA. 17+40 (25.0'R.) EXIST. CATCH BASIN TO BE REMOVED

STA. 17+29 20' ASPH. DR.

STA. 17+74 (25.0'L.) EXIST. CATCH BASIN TO BE REMOVED

STA. 18+40 (25.0'R.) BEGIN PAVEMENT TAPER

STA. 18+35 (25.0'L.& R.) CITY OF CLEVELAND No.1 CATCH BASIN T/G = 735.47

STA. 19+30 END 4" CONCRETE WALK END PAVEMENT TAPER (22.0'R.) END TYPE 2–B CURB

END WORK STA. 20+00

STA. 23+10.33 MON. BOX I.P. FND.

STA. 9+00 MON. BOX D.H. FND.

CONSTR. FAIRHILL RD.

CEDAR RD.

BALDWIN RD.

10.00'

MONUMENTED

℄ REFERENCE

DRIVEWAY QUANTITIES

REF. NO.	Station	Side	304 AGGREGATE BASE	448 ASPHALT CONCRETE INTERMEDIATE COURSE, TYPE 2	448 ASPHALT CONCRETE SURFACE COURSE, TYPE 1	408 BITUMINOUS PRIME COAT	452 8" PLAIN CONCRETE PAVEMENT
			C.Y.	C.Y.	C.Y.	GAL.	C.Y.
1A	17+29	RT.	28	5	3	36	9
2A	17+46	LT.	15	2	2	18	7
	TOTALS		43	7	5	54	16

FOR WATERWORK NOTES, QUANTITIES AND DETAILS, SEE SHEETS 15 THRU 27.

FOR FENCE WORK AND QUANTITIES, SEE SHEET 13A

* 707.41 NON–PERFORATED ASTM 3034 SDR 35 OR 707.42 OR 707.33

732.73 733.83 734.77 735.57 736.22 736.72 737.07 737.27 737.32 737.22 737.18 737.02 736.82 736.61 736.41 736.25 736.21 736.15 736.27 736.59 737.10 737.23

732.23 734.20 735.24 735.42 735.55 735.63 735.77 736.14 736.64 737.77

340' VERTICAL CURVE SSD = 236'

P.V.I. STA. 15+35 ELEV. = 738.56

+7.31% −0.81% −0.81% −0.81% +2.60%

727.10(±) 729.35 725.95(±) 713.85(±) EX. 12" STM.

22.02' PROP. VERT. CL. 22.46' PROP. VERT. CL. 28.57' PROP. VERT. CL. 28.72' PROP. VERT. CL. 19.90' PROP. VERT. CL. 20.00' PROP. VERT. CL.

P.V.T. STA. 17+05

729.87

110' VERTICAL CURVE SSD = 233'

STA. 18+00 (24.0'R.) EXIST. CATCH BASIN TO BE REMOVED

731.67

MEET EXISTING STA. 19+30

P.V.I. STA. 18+75 ELEV. = 735.80

P.V.C. STA. 18+20

P.V.T. STA. 19+30

1–36" WATER

2–48" WATER

6" WATER

EXCAVATION = 27 C.Y.
EMBANKMENT = 1704 C.Y.

36" WATER

48" WATER

48" WATER

15 16 17 18 19

ESTIMATED QUANTITIES

REF. NO.	Station	Side	202 CATCH BASIN REMOVED	202 PIPE REMOVED, 24" & UNDER	603 12" CONDUIT, TYPE B 706.01, 706.02 OR 706.08	603 12" CONDUIT, TYPE C 706.01, 706.02 OR 706.08	604 6" CONDUIT TYPE F *	604 CITY OF CLEVELAND No. 1 CATCH BASIN	604 CITY OF CLEVELAND No. 1 CATCH BASIN AS PER PLAN	605 6" SHALLOW PIPE U.D., WITH FABRIC WRAP	605 6" SHALLOW PIPE U.D., 707.41 OR 707.32	608 4" CONC. WALK	622 CONC. BARRIER TYPE D, A.P.P.
			EA.	L.F.	L.F.	L.F.	L.F.	EA.	EA.	L.F.	L.F.	L.F.	L.F.
1D	From 14+86	R	1	55		14			1				
2D	17+40	R	1	52									
3D	18+00	L&R	1	22									
4D	To 17+74	L											
5D	17+66	L											
6D	17+74	L											
7D	18+35	L&R			50	71							
1SW	14+75	L					1	1					
2SW	15+27	R											
3SW	14+75	L											
4SW	15+15	R											
1B	17+03	R											
2B	19+30	L											
3B	14+75	L											
4B	15+16	R											
1U	14+91	L											
2U	15+26	R											
3U	17+03	R											
4U	17+17	R											
5U	17+11	L											
6U	19+30	R											
7U	15+00	L&R											
	17+35	L&R											
	TOTAL		3	129	64	71	40	2	1	412	104	2	116
			202					604				608	622

PLAN AND PROFILE STA. 14+75 TO STA. 19+50

[[AutoCad R14 – PAT]] – I:\PROJECTS\90318662.20\ACAD\090F58.DWG – SEPT 01, 1999 – 16:31:09 – PLOT: 1=20

Stokes 0031 (4:021) SFN: 1833936

SEEDING	
END WIDTH	SQ. YDS

CALC. BY V.S. DATE 10/93
CHKD. BY T.H. DATE 10/93

CUYAHOGA COUNTY
CUY – FAIRHILL ROAD

OHIO
FHWA REGION 5
10
58

PAVEMENT REMOVAL (TYP. ALL SHEETS)

℄ SURVEY & CONSTR.
FAIRHILL ROAD

STA. 14+00 (5.0'R.)
EXIST. W.M.M.H.

STA. 12+56 (22.0'L.)
EXIST. CATCH BASIN
TO BE REMOVED
CITY OF CLEVELAND
No. 1 CATCH BASIN
T/G = 718.72
INV. 12" = 714.40
INV. U.D. (N. & S.) = 715.22

STA. 12+56 (5.0'L.)
EXIST. STM. MANHOLE
TO BE REMOVED

STA. 12+58 (22.0'R.)
EXIST. CATCH BASIN
TO BE REMOVED
CITY OF CLEVELAND
No. 1 CATCH BASIN
T/G = 718.83
INV. 12" = 714.50
INV. U.D. (N. & S.) = 715.33

STA. 12+56 (10.0'R.)
No.3 MANHOLE
LID AT 11.0' R
T/C = 719.13
INV. 12" = 714.26
INV. 12" = 714.08
INV. EX. 12" = 707.66(±)

BEGIN PROJECT STA. 12+40

END AREA CUT	END AREA FILL	VOLUME CUT	VOLUME FILL
1	169		
		4	251
4	102		
		6	144
2	54		
		2	105
0	59		
		0	11
0	0		
		0	0
0	0		

CROSS SECTIONS STA. 12+00 TO STA. 14+00

Stokes 0031 (4:021) SFN: 1833936

SEEDING	
END WIDTH	SQ. YDS

CALC. BY V.S. DATE 10/93
CHKD. BY T.H. DATE 10/93

CUYAHOGA COUNTY
CUY–FAIRHILL ROAD

OHIO
FHWA REGION 5

11
58

℄ SURVEY & CONSTR.
FAIRHILL ROAD

MEET EXISTING
736.16
736.86
737.15
737.03
736.30
R/W
-21.9%
-13.9%
-5.9%
℄ C.E.I. 11–4" DUCTS
℄ C.E.I. 4–4" DUCTS
℄ 6" WATER

DRIVE PROFILE – STA. 17+46, LT. – 15' ASPHALT DRIVE

736.49
737.23
737.36
R/W
+1.5%
MEET EXISTING (81' RT.)
℄ O.B.T.
℄ 6–C.P.P. DUCTS

DRIVE PROFILE STA. 17+29, RT. – 20' ASPHALT DRIVE

MISC. QUANTITY, SLOPES BEHIND PIERS

STA. 14+88 (25.0'R.)
EXIST. CATCH BASIN TO BE REMOVED
CITY OF CLEVELAND
No. 1 CATCH BASIN
T/G = 732.63
INV. 12" = 729.35

R/W
PROP. CL FENCE
STA. 14+70 (25.0'L.)
EXIST. CATCH BASIN TO BE REMOVED
CITY OF CLEVELAND
No.1 CATCH BASIN
T/G = 731.80
INV. EX. 12" = 728.28(±)
2:2:1
STA. 14+86 (10.0'R.)
EXIST. STM. MANHOLE
RECONSTRUCT TO GRADE, LID AT 11.0'R
PROP. T/C = 733.02
EXIST. 12" STM.
6'–12" TYPE B
℄ C.E.I. 8–4" DUCTS
℄ C.E.I. 11–4" DUCTS
℄ 6" WATER
EXIST. 12" INV. = 725.95(±)
14'–12" TYPE B
12" INV. = 727.10(±)
4:1
℄ O.B.T.
℄ 6–C.P.P. DUCTS
733.83
15+00
732.23
713.85(±)
R/W
PROP. CL FENCE
2:1
℄ C.E.I. 6–4" DUCTS
℄ 48" WATER
℄ 48" WATER
℄ 6" WATER
℄ 36" WATER
731.48 (PROP.)
14+50
729.60 (EXISTS.)
EXIST. 6' HIGH CHAIN LINK FENCE
2:1
℄ O.B.T.
℄ 6–C.P.P. DUCTS
MATCH LINE STA. 14+75

	END AREA		VOLUME	
	CUT	FILL	CUT	FILL
STA. 15+20.88 BACK	0	144		690
	0	111		
	0	144		
	0	144		
	0	166		
	0	164		
	0	188		
	0	331		
STA. 14+00	0	169		

CROSS SECTIONS STA. 14+50 TO STA. 17+46

SFN: 1833936 Stokes 0031 (4:021)

SEEDING	
END WIDTH	SQ. YDS

CALC. BY V.S. DATE 10/93
CHKD. BY T.H. DATE 10/93

CUYAHOGA COUNTY
CUY–FAIRHILL ROAD

OHIO
FHWA REGION 5

12
58

℄ SURVEY & CONSTR.
FAIRHILL ROAD

STA. 18+35 (25.0'L.)
CITY OF CLEVELAND
No.1 CATCH BASIN
T/G = 735.47
INV. 12" = 731.17
INV. 12" = 730.92
INV. U.D. (N. & S.) = 732.13

STA. 18+35 (25.0'R.)
CITY OF CLEVELAND
No.1 CATCH BASIN
T/G = 735.47
INV. 12" = 731.67
INV. U.D. (N. & S.)
= 732.13

STA. 18+35 (25.0'L.)
CITY OF CLEVELAND
No.1 CATCH BASIN
T/G = 735.47

STA. 17+66 (43.0'L.)
EXIST. MANHOLE
RECONSTRUCT TO GRADE
PROP. T/C = 737.10

R/W

20:1

℄ C.E.I. 4–4½" DUCTS
℄ O.B.T.
50'–12" CONDUIT TYPE B @ 1.00%
℄ 6" WATER
℄ 6–C.P.P. DUCTS
℄ 48" WATER
736.40
18+50
736.14
℄ 36" WATER
℄ 30" WATER
℄ C.E.I. 6–4" DUCTS
71'–12" COND. TYPE C @ 1.00%
730.21
730.92

STA. 17+66, 43'L
EXIST. MANHOLE,
RECONSTRUCT
TO GRADE
PROP. T/C = 737.10
INV. 12" = 730.21

STA. 17+74, 25'L
EXIST. CATCH BASIN
TO BE REMOVED

10:1

℄ C.E.I. 4–4½" DUCTS
℄ C.E.I. 6–4" DUCTS
℄ O.B.T.
℄ 36" WATER
℄ 6–C.P.P. DUCTS
℄ 6" WATER
℄ 48" WATER
736.43
18+00
735.77
℄ 30" WATER
STA. 18+00, 25'R
EXIST. CATCH BASIN
TO BE REMOVED

EXIST. & PROP.
7' HIGH CHAIN LINK
FENCE W/ BARBED WIRE

SEE DRIVE PROFILE STA. 17+46, LT.

2:1

℄ C.E.I. 11–4" & 8–4" DUCTS
℄ C.E.I. 4–4" DUCTS
℄ 36" WATER
℄ O.B.T.
℄ 6–C.P.P. DUCTS
℄ 30" WATER
℄ 6" WATER
℄ 48" WATER
℄ 24" WATER
736.82 (PROP.)
17+50
735.63 (EXIST.)
STA. 17+40, 25'R
EXIST. CATCH BASIN
TO BE REMOVED

DRIVE @ STA. 17+46
DRIVE @ STA. 17+29

AHEAD
STA. 17+08.70

END AREA CUT	END AREA FILL	VOLUME CUT	VOLUME FILL
5	47		
		6	115
2	77		
		2	228
0	169		
		0	259
		4	14
		8	9
0	169		

CROSS SECTIONS STA. 17+50 TO STA. 18+50

Stokes 0031 (4:021) SFN: 1833936

SEEDING	
END WIDTH	SQ. YDS

CALC. BY V.S. DATE 10/93
CHKD. BY T.H. DATE 10/93

CUYAHOGA COUNTY
CUY–FAIRHILL ROAD

OHIO
FHWA REGION 5

13
58

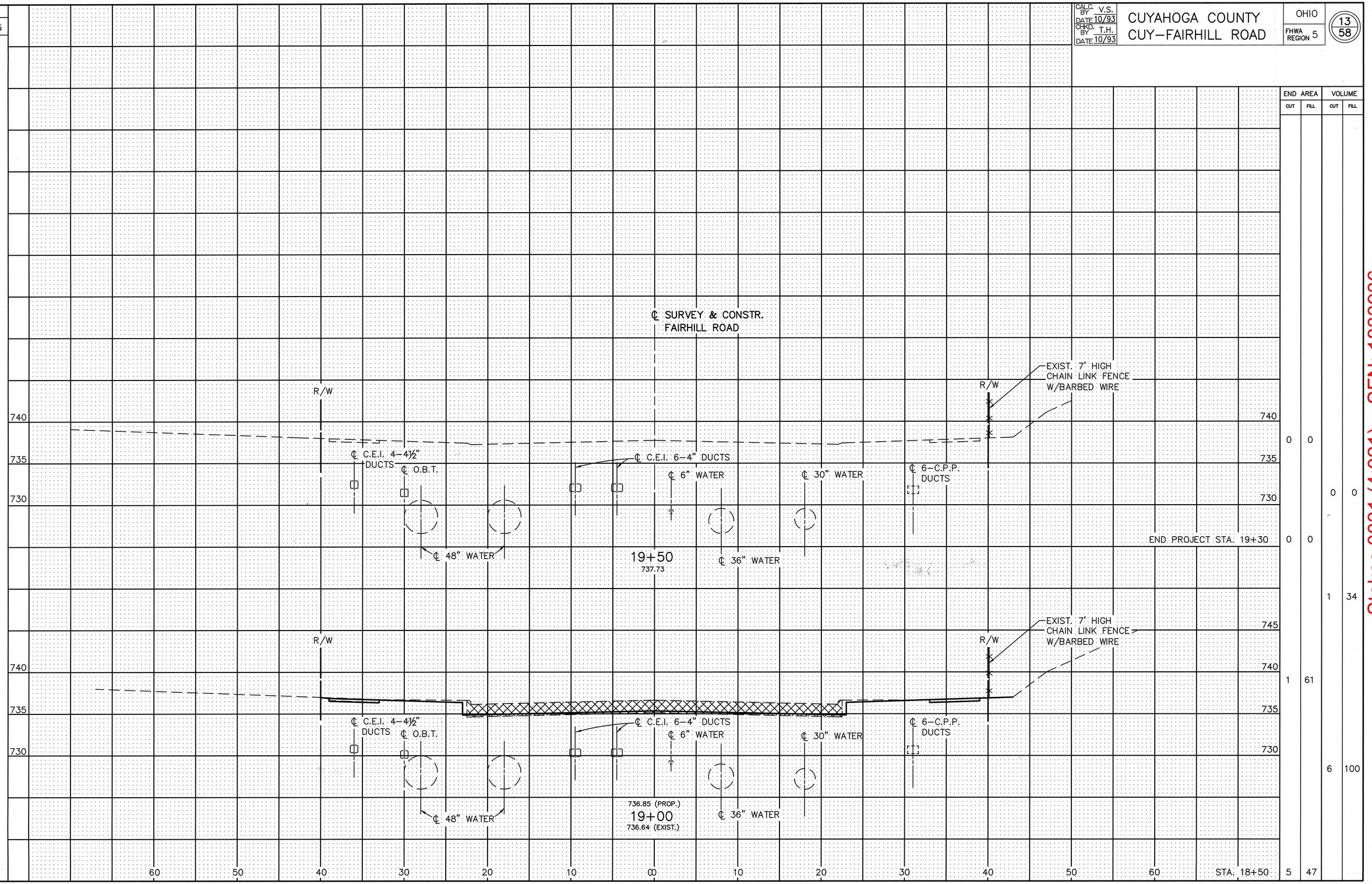

END AREA		VOLUME	
CUT	FILL	CUT	FILL
0	0		
0	0	0	0
0	0	1	34
1	61	6	100
5	47		

CROSS SECTIONS STA. 19+00 TO STA. 19+50

Stokes 0031 (4:021) SFN: 1833936

CALC. BY V.S. DATE 11/96	CUYAHOGA COUNTY	OHIO
CHKD. BY T.H. DATE 11/96	CUY – FAIRHILL ROAD	FHWA REGION 5

13A
58

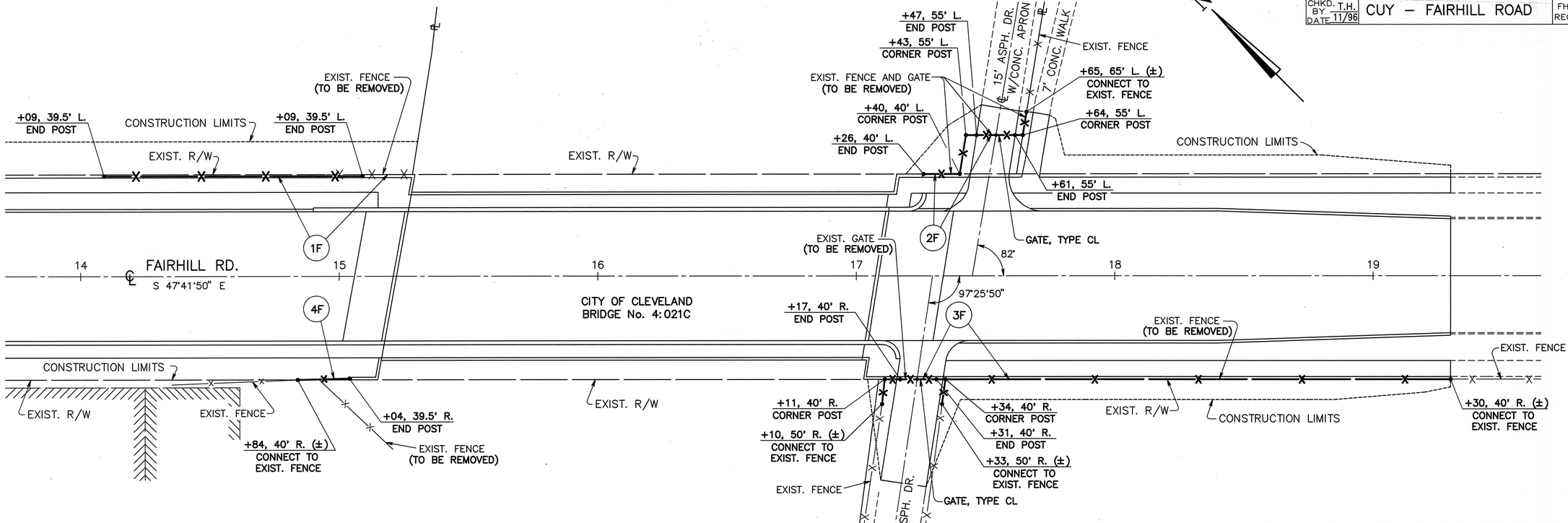

FENCE PLAN

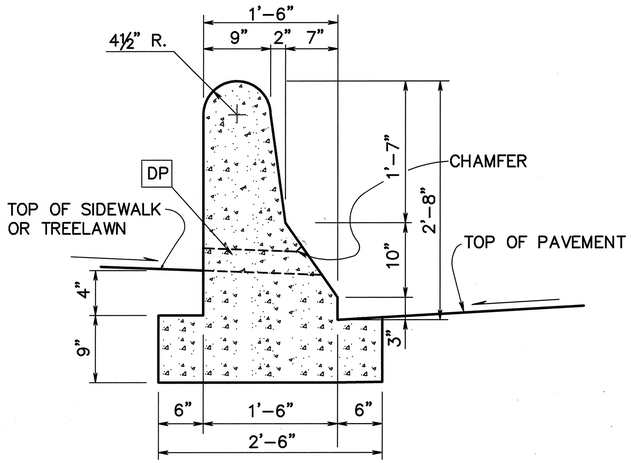

CONCRETE BARRIER, TYPE D, AS PER PLAN

DP – 12" x 3" DRAINPORTS @ 10'–0" c/c (MAX.)
SEE STANDARD DRAWING RM-4.3M FOR ADDITIONAL DETAILS AND NOTES.

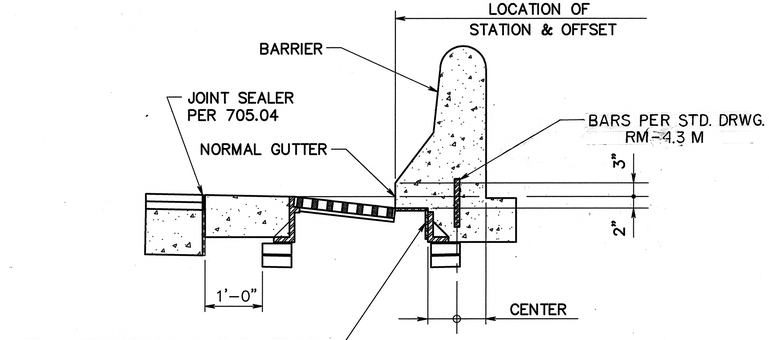

NEENAH FOUNDRY CO. CURB PLATE OR EAST JORDAN IRONWORKS TYP T–3 BACK, AS REQUIRED OR APPROVED EQUAL.

NO. 1 CATCH BASIN AT CONCRETE BARRIER
SEE CONSTRUCTION DRAWING CB–1 FOR ADDITIONAL DETAILS

FENCE QUANTITIES

REF. NO.	STATION	SIDE	202		607				
			FENCE REMOVED	GATE REMOVED	FENCE, TYPE CL	FENCE, TYPE CL, 6' HEIGHT	FENCE, TYPE CL, 7' HEIGHT WITH BARBED WIRE	GATE, TYPE CL, 6' HEIGHT	GATE, TYPE CL, 7' HEIGHT WITH BARBED WIRE
	FROM – TO		L.F.	EA.	L.F.	L.F.	L.F.	EA.	EA.
1F	14+09 – 15+28	L	33		100				
2F	17+26 – 17+65	L	50	1		50		1	
3F	17+10 – 19+30	R	220	1			225		1
4F	14+84 – 15+10	R	35			20			
TOTALS			338	2	100	70	225	1	1

Stokes 0031 (4:021) SFN: 1833936

CUYAHOGA COUNTY, OHIO
CUY-FAIRHILL ROAD
FHWA REGION 5
14/58

NO. 1 CATCH BASIN

LEGEND

V.C. ~ VERTICAL CURB
M.C. ~ MOUNTABLE CURB
T/C ~ TOP OF CASTING

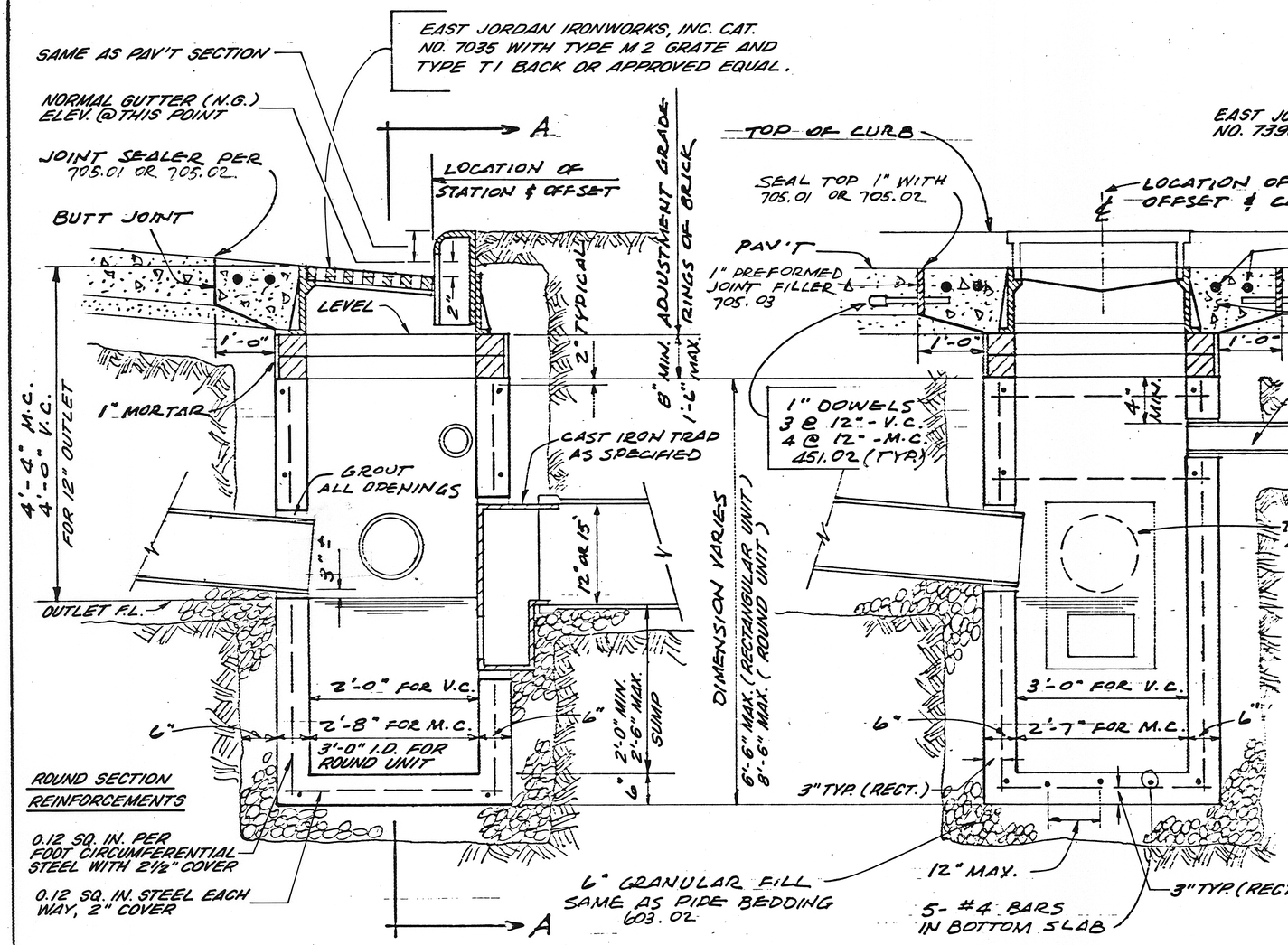

VERTICAL CURB
NO. 1 - VC - CB

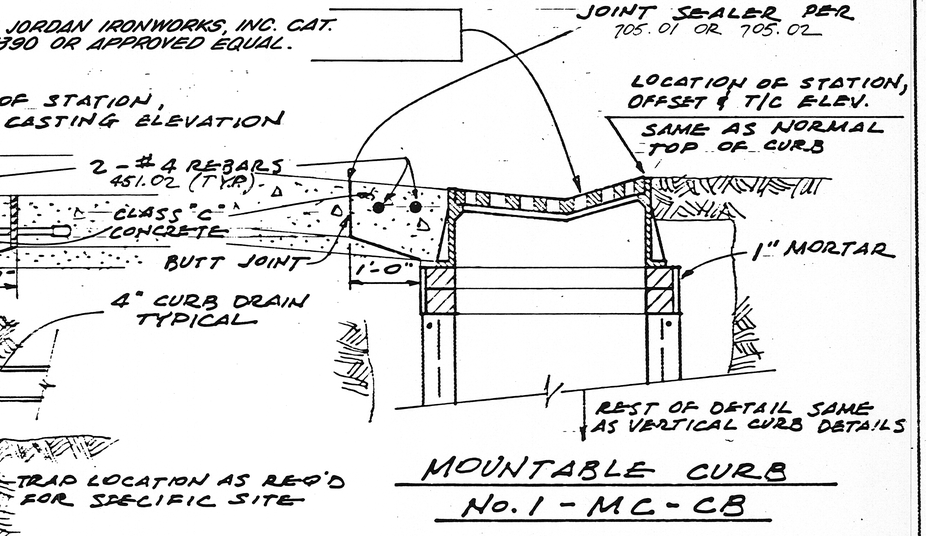

MOUNTABLE CURB
NO. 1 - MC - CB

NOTES

1. ALL REINFORCING SHALL BE 709 #4 DEFORMED BARS AND SUFFICIENT TO PERMIT SHIPPING AND PLACEMENT WITHOUT DAMAGE FOR RECTANGULAR SHAPE.
2. CONCRETE SHALL BE ODOT 499 CLASS "C" 4000 PSI IN 28 DAYS.
3. BOX-OUT PAID FOR AS PAV'T IN PORTLAND CEMENT CONCRETE (PCC) PAV'T AND AS PART OF THE CATCH BASIN IN ASPHALTIC CONCRETE PAV'T (ACP) - NO DEDUCTION IN PAV'T OR CURB QUANTITY BECAUSE OF CASTINGS. FOR FULL WIDTH ACP CONSTRUCT A PCC APRON THE SIZE OF THE BOX-OUT - DELETE DOWELS. WHEN USED WITH A PCC CURB AND GUTTER MAINTAIN GUTTER WIDTH.

SECTION "A-A"

ALTERNATE

IF APPROVED BY THE ENGINEER 8" THICK MASONRY WALLS MAY BE USED IN LIEU OF PRECAST UNITS.

TRAP

EAST JORDAN IRONWORKS, INC. CAT. NO. 5964-12 OR 15, NEENAH FOUNDRY CO. CAT. NO. R-3707-12 OR 15 OR APPROVED EQUAL.

ALTERNATE BASIN SHAPE

A ROUND PRECAST CONCRETE UNIT MAY BE USED IN LIEU OF RECTANGULAR UNIT. THE ROUND SECTION SHALL BE A 36" I.D. UNIT WITH INTEGRAL BASE AND PRECAST TOP TRANSITION (ROUND TO RECTANGULAR) SECTION TO FIT CASTING BEING USED. TRANSITION UNIT REQUIRES A #5 REBAR AT CORNERS OF RECTANGULAR SHAPED SECTION AND 3×8 W6×W5 WELDED WIRE FABRIC IN VERTICAL SECTION.

REVISIONS	DATE

CITY OF CLEVELAND
ENGINEERING DIVISION
JOSEPH L. STAMPS - DIRECTOR OF PUBLIC SERVICE

RECTANGULAR PRECAST CONCRETE NO. 1 CATCH BASIN

NO SCALE

DRAWN BY: GAE DATE:
SUBMITTED BY: ENGR. OF DESIGN DATE:
APPROVED: COMM. OF ENGR. DATE: 14/58

CONSTR. DRWG. CB-1

Stokes 0031 (4:021) SFN: 1833936

CALC. BY		CUYAHOGA COUNTY	OHIO	15/58
DATE		CUY–FAIRHILL ROAD	FHWA REGION 5	1/13
CHKD. BY				
DATE				

SCHEMATIC PLAN

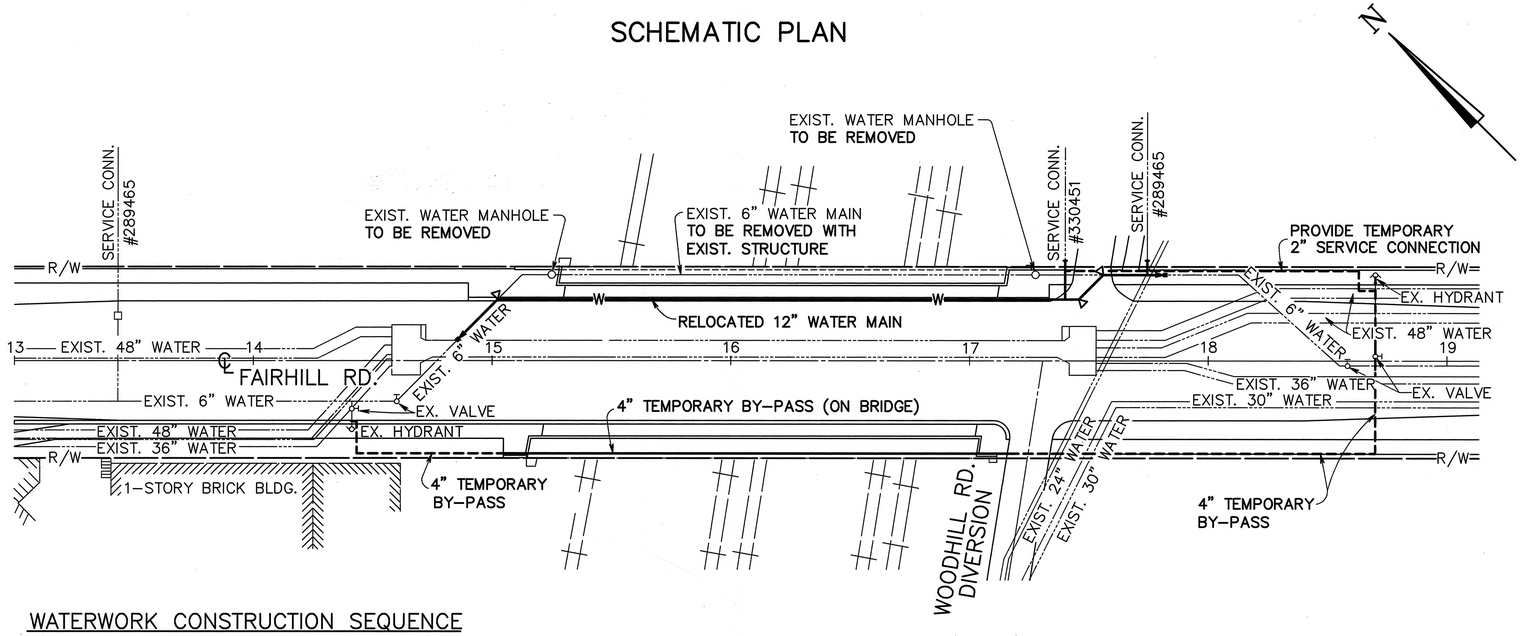

WATERWORK CONSTRUCTION SEQUENCE

GENERAL

1. RELOCATION AND REPLACEMENT OF THE EXISTING 6 INCH WATER MAIN WITH THE PROPOSED 12 INCH WATER MAIN ON THE BRIDGE STRUCTURE CARRYING FAIRHILL ROAD OVER CONRAIL, NORFOLK AND WESTERN, AND G.C.R.T.A. IS TO BE COORDINATED WITH THE CONSTRUCTION STAGES ESTABLISHED FOR PROJECT CONSTRUCTION AND MAINTENANCE OF TRAFFIC.
2. THE CONTRACTOR SHALL BE REQUIRED TO INSTALL A TEMPORARY BY–PASS AND TEMPORARY SERVICE CONNECTION AS SHOWN IN THE PLANS AND AS SPECIFIED IN THE NOTES. THE SHUTDOWN OF THE EXISTING 6 INCH SUPPLY MAIN WITHIN THE PROJECT LIMITS SHALL NOT BE PERMITTED UNTIL THE TEMPORARY BY–PASS AND TEMPORARY SERVICE CONNECTION HAVE BEEN INSTALLED AND ACCEPTED BY THE CITY.

WORK TO BE PERFORMED PRIOR TO PROJECT STAGE I CONSTRUCTION

1. CONSTRUCT TEMPORARY BY–PASS BETWEEN EXISTING HYDRANTS AT STA. 14+40 (±), 29' (±) RIGHT AND STA. 18+70 (±), 36' (±) LEFT AS SHOWN IN THE PLANS AND AS SPECIFIED IN THE NOTES. PROVIDE A TEMPORARY SERVICE CONNECTION FOR SERVICE CONNECTIONS #330451 AND #289465 AS SHOWN.
2. ROUTE SERVICE THROUGH TEMPORARY BY–PASS. SHUT DOWN EXISTING 6 INCH SUPPLY MAIN BY CLOSING VALVES AT STA. 14+60 (±), 17' (±) RIGHT AND STA. 18+55 (±), 2' (±) RIGHT.

WORK TO BE PERFORMED DURING PROJECT STAGE I CONSTRUCTION

1. REMOVE EXISTING 6 INCH PIPE BETWEEN THE PLAN LIMITS AS SHOWN. REMOVE EXISTING WATER MANHOLES AT LOCATIONS SHOWN.
   CONTRACTOR NOTE: EXISTING JOINT LOCATIONS AT THE WATER MAIN BEGIN AND END STATIONS ARE NOT KNOWN. PIPE REMOVAL SHALL BE BETWEEN EXISTING JOINTS CLOSEST TO, BUT BEYOND THE LIMITS SHOWN ON THE PLAN. CUT EXISTING PIPE BARREL IMMEDIATELY BEHIND THE BELL.
2. CONSTRUCT RELOCATED 12 INCH WATER MAIN AND SERVICE CONNECTION #330451 IN COORDINATION WITH STAGE I CONSTRUCTION.
3. RESTORE SERVICE TO RELOCATED 12 INCH WATER MAIN.
4. REMOVE TEMPORAY BY–PASS AND TEMPORARY SERVICE CONNECTION.

APPROVED BY: DATE: December 10, 1996

Michael Konicki DIRECTOR, DEPARTMENT OF PUBLIC UTILITIES

COMMISSIONER, DIVISION OF WATER

Donald L. Tucker WATER MAIN REVIEW ENGINEER

REVISIONS	

LOW SERVICE DISTRICT

DEPARTMENT OF PUBLIC UTILITIES
CLEVELAND, OHIO

DIVISION OF WATER AND HEAT CONTRACT NO. _____

SUBJECT FAIRHILL ROAD WATER MAIN
SCHEMATIC PLAN
BRIDGE OVER N. & W. R.R., CONRAIL, & G.C.R.T.A. – BRIDGE No. 4:021C

DRAWN BY	SCALE 1"= 30'	NO. B–3047
TRACED BY		
CHECKED BY DATE		

WATERWORK SCHEMATIC PLAN

Stokes 0031 (4:021) SFN: 1833936

WATERWORK GENERAL SUMMARY

ITEM	SHEET NUMBERS						ITEM	ITEM EXT.	GRAND TOTAL	UNIT	DESCRIPTION	AS PER PLAN SHEET REF.
		19	22	24								
202				2			202	58000	2	EACH	MANHOLE REMOVED	
604				5			604	35500	5	EACH	MANHOLE RECONSTRUCTED TO GRADE	
638				7			638	10800	7	EACH	VALVE BOX ADJUSTED TO GRADE	
638				1			638	10900	1	EACH	SERVICE BOX ADJUSTED TO GRADE	
SPECIAL				120			SPECIAL	63821008	120	LIN. FT.	12" WATER MAIN DUCTILE IRON PIPE WITH BOLTLESS RESTRAINED JOINTS AND FITTINGS, ANSI CLASS 52	
SPECIAL				191			SPECIAL	63822200	191	LIN. FT.	12" WATER MAIN GALVANIZED STEEL PIPE ASTM A53, GRADE B	
SPECIAL				1			SPECIAL	63824700	1	EACH	EXTEND AND ADJUST HYDRANT TO GRADE, TYPE A	
SPECIAL				1			SPECIAL	63824704	1	EACH	SHORTEN AND ADJUST HYDRANT TO GRADE, TYPE A	
SPECIAL			3000				SPECIAL	63825000	3000	POUND	MISCELLANEOUS METAL WORK	
SPECIAL				1			SPECIAL	63826300	1	EACH	RETAP AND RECONNECT 3/4" WATER SERVICE CONNECTION, SHORT SIDE COMPLETE	
SPECIAL				1			SPECIAL	63826402	1	EACH	RETAP AND RECONNECT 1-1/2" WATER SERVICE CONNECTION, SHORT SIDE COMPLETE	
SPECIAL				1			SPECIAL	63830200	1	EACH	TEMPORARY SERVICE CONNECTION, COMPLETE	
SPECIAL							SPECIAL	63830250	LUMP	LUMP	MAINTENANCE OF WATER SERVICE	
SPECIAL		0.5					SPECIAL	63830500	0.5	M.B.F.	SHEETING LEFT IN PLACE	

Stokes 0031 (4:021) SFN: 1833936

WATERWORK NOTES

WATERWORK NOTES

GENERAL

SCOPE OF WORK

THE WORK CONTEMPLATED UNDER THIS CONTRACT COMPRISES FURNISHING AND INSTALLING COMPLETE WITH VALVES AND OTHER APPURTENANCES, WATER MAIN RELOCATIONS AND PERFORMING OTHER INCIDENTAL WORK NECESSARY AS SHOWN ON SHEET NO. 1 OF 13 THRU 13 OF 13.

GENERAL NOTES

THE EXACT LOCATION OF EXISTING WATER LINES AND UNDERGROUND STRUCTURES IS NOT KNOWN. INFORMATION SHOWN ON THE PLANS WAS OBTAINED FROM CLEVELAND WATER DEPARTMENT DRAWINGS.

THE STATIC HEAD USED FOR BOTH DESIGN AND TESTING SHALL BE MEASURED FROM ELEVATION 803. THE FIELD TESTING HEAD SHALL BE 75 PSI PLUS THAT DUE TO THE STATIC HEAD, BUT IN NO CASE LESS THAN 150 PSI.

THE CONTRACTOR SHALL NOTIFY THE CLEVELAND WATER DEPARTMENT INSPECTION AND ENFORCEMENT THREE (3) WEEKS PRIOR TO STARTING ANY WATER WORKS CONSTRUCTION.

AFTER AWARD OF CONTRACT, THE CONTRACTOR THROUGH THE PROJECT ENGINEER SHALL SUBMIT TO THE CITY OF CLEVELAND WATER DEPARTMENT, INSPECTION AND ENFORCEMENT SECTION, A CONSTRUCTION SCHEDULE RELATING TO THE WATERWORK.

DEFINITIONS

WHEREVER IN THESE SPECIFICATIONS OR IN OTHER CONTRACT DOCUMENTS THE FOLLOWING TERMS OR PRONOUNS IN PLACE OF THEM ARE USED, THE INTENT AND MEANING SHALL BE INTERPRETED AS FOLLOWS:

THE STATE

THE STATE IS THE STATE OF OHIO ACTING THROUGH ITS AUTHORIZED REPRESENTATIVE.

ENGINEER

THE ENGINEER IS DISTRICT DEPUTY DIRECTOR OR DISTRICT ENGINEER, THE DISTRICT CONSTRUCTION ENGINEER OR THE DISTRICT MAINTENANCE ENGINEER OF THE PROJECT ENGINEER ASSIGNED TO ADMINISTER THE CONTRACT, OR THEIR DULY DESIGNATED DEPUTIES, AGENTS, OR REPRESENTATIVES.

THE CITY

THE CITY IS THE DIRECTOR, DEPARTMENT OF PUBLIC UTILITIES OF THE CITY OF CLEVELAND OR THEIR DULY DESIGNATED DEPUTIES, AGENTS OR REPRESENTATIVES.

STATUS OF CITY INSPECTORS

INSPECTORS AS DESIGNATED BY THE DIRECTOR OF PUBLIC UTILITIES ARE AUTHORIZED TO INSPECT ALL WORK DONE AND MATERIALS FURNISHED, SUCH INSPECTION MAY EXTEND TO ALL OR ANY PART OF THE WATERWORK, AND TO THE PREPARATION OR MANUFACTURE OF THE MATERIALS TO BE USED IN THE WATERWORK. THE CITY INSPECTOR AS DESIGNATED BY THE DIRECTOR OF PUBLIC UTILITIES WILL MAKE WORK INSTRUCTIONS THROUGH THE PROJECT ENGINEER. ARRANGEMENTS FOR CITY INSPECTORS ARE TO BE MADE BY NOTIFYING INSPECTION AND ENFORCEMENT DIVISION OF WATER WITHIN THE TIME SPECIFIED. NO WORK SHALL BE ACCEPTED UNLESS INSPECTED.

ACCESS TO WORK AND PLACE OF MANFACTURE

THE CONTRACTOR SHALL NOTIFY THE ENGINEER AND DIRECTOR OF PUBLIC UTILITIES, AT LEAST SEVEN (7) DAYS PREVIOUS TO THE COMMENCEMENT OF THE MANUFACTURE OF ANY MATERIALS, OF THE TIME AND PLACE WHERE THE MANUFACTURE IS TO COMMENCE, IN ORDER THAT A REPRESENTATIVE OF THE ENGINEER AND DIRECTOR MAY BE PRESENT TO INSPECT THE MANUFACTURE. THE CONTRACTOR SHALL PROVIDE, WITHOUT CHARGE OR EXPENSE TO THE STATE AND CITY, ALL NECESSARY ASSISTANCE TO THE ENGINEER AND DIRECTOR WHEN REQUIRED FOR INSPECTION OR VERIFICATION OF WORK DONE.

DIMENSIONS, DETAILIED DRAWINGS AND ELEVATIONS

FIGURED DIMENSIONS ON DRAWINGS SHALL TAKE PRECEDENT OVER MEASUREMENTS BY SCALE, AND DETAILED DRAWINGS ARE TO TAKE PRECEDENCE OVER GENERAL DRAWINGS AND SHALL BE CONSIDERED AS EXPLANATORY OF THEM AND NOT AS INDICATING EXTRA WORK. IF, HOWEVER, ANY OF THE DETAILED DRAWINGS SHOW MORE ELABORATE OR EXPENSIVE WORK THAN IS NORMALLY SPECIFIED AND INDICATED BY THE CONTRACT DRAWINGS, NOTICE THEREOF MUST BE GIVEN TO THE ENGINEER BY THE CONTRACTOR WITHIN TEN (10) DAYS AFTER RECEIPT OF SUCH DETAILED DRAWINGS IN ORDER THAT THE DRAWINGS MAY BE AMENDED OR THE ADDITIONAL EXPENSE ON ACCOUNT OF SUCH WORK MAY BE ADJUSTED AND AUTHORIZED. IF THE ENGINEER DOES NOT RECEIVE SUCH NOTICE FROM THE CONTRACTOR WITHIN TEN (10) DAYS AFTER THE DETAILED DRAWINGS HAVE BEEN RECEIVED BY HIM. IT IS HEREBY AGREED THAT THE CONTRACTOR ACCEPTS THE DRAWINGS AND WILL EXECUTE THEM WITHOUT CLAIM FOR EXTRA COMPENSATION.

ERRORS AND DISCREPANCIES

IF THE CONTRACTOR, IN THE COURSE OF HIS WORK, FINDS ANY DISCREPANCY BETWEEN THE PLANS, DESCIPTION AND LOCATION OF WORK AND ESTIMATE OF QUANTITIES, THE PHYSICAL CONDITION OF THE LOCALITY, OR ANY ERRORS IN THE PLANS OR IN THE LAYOUT AS GIVEN BY THE DRAWINGS AND INSTRUCTIONS WHICH MAKE IT IMPOSSIBLE FOR HIM TO COMPLETE THE WORK REQUIRED UNDER THE PLANS AND SPECIFICATIONS, IT SHALL BE HIS DUTY TO IMMEDIATELY INFORM THE ENGINEER IN WRITING AND THE ENGINEER SHALL VERIFY THE SAME. ANY WORK DONE AFTER SUCH DISCOVERY, UNTIL AUTHORIZED, SHALL BE DONE AT THE CONTRACTOR'S RISK.

FLOODS AND FREEZING WEATHER

PROPER FACILITIES SHALL BE PROVIDED FOR PROTECTING THE WORK FROM DAMAGE BY FLOOD RAIN OR FROST, AND WORK DONE IN FREEZING WEATHER SHALL BE DONE IN SUCH MANNER AS THE ENGINEER MAY APPROVE. VALVES SHALL BE PROTECTED FROM FREEZING UNTIL BACKFILLED IN THE COMPLETED WORK.

ADDITIONAL WORK

(A) ATTENTION IS CALLED TO THE FACT THAT THE WORK OF THIS CONTRACT INCLUDED CERTAIN PERFORMANCE AS INCIDENTAL TO THE ITEMIZED REQUIREMENTS HEREOF, THOUGH NOT EXCLUSIVE AS FOLLOWS: TO PERFORM ALL EXCAVATION, BACKFILLING, SHEETING, SHORING, AND TO TEST AND CHLOINATE THE INSTALLATION. THE STATE WILL MAKE NO SPECIFIC OR SEPARATE PAYMENT OR ALLOWANCE, BUT THE COST THERE SHALL BE INCLUDED IN THE PRICES STIPULATED TO BE PAID FOR UNDER THE VARIOUS WATERWORK ITEMS OF WORK TO BE DONE UNDER THIS CONTRACT.

(B) PRLIMINARY FLUSHING: BEFORE BEING PLACED IN SERVICE, ALL DIRT AND FOREIGN MATTER SHALL BE REMOVED FROM THE NEW WATER MAIN OR EXTENSIONS TO EXISTING MAINS BY A THOROUGH FLUSHING THROUGH THE HYDRANTS OR BY OTHER APPROVED MEANS. EACH VALVED SECTION OF NEWLY LAID PIPE SHALL BE FLUSHED INDEPENDENTLY. THIS SHALL BE DONE AFTER THE PRESSURE TEST AND MAY BE DONE BEFORE OR AFTER THE TRENCH SHALL HAVE BEEN BACKFILLED.

TESTING MAINS

(A.) ALL PIPES, VALVES, FITTINGS, ETC., SHALL BE LAID IN SUCH A MANNER AS TO LEAVE ALL JOINTS WATERTIGHT. AFTER THE PIPE IS LAID, SUCH LENGTHS OF THE WATER MAIN AS THE DIRECTOR OR HIS DESIGNATE MAY DETERMINE, SHALL BE TESTED UNDER HYDROSTATIC PRESSURE INDICATED IN GENERAL NOTES.

(B.) THE HYDROSTATIC TEST SHALL BE UNDER THE DIRECTION OF THE DIRECTOR OF PUBLIC UTILITIES OR HIS DESIGNATE. THE CONTRACTOR MAY OBTAIN WATER FOR TESTING BY OBSERVING THE RULES AND REGULATIONS ENFORCED IN THE MUNICIPALITIES OR TOWNSHIPS IN WHICH THE WORK IS BEING DONE. THE CITY WILL FURNISH A PRESSURE GAUGE FOR MEASURING THE PRESSURE ON THE WATER MAIN, BUT THE CONTRACTOR SHALL FURNISH A SUITABLE PUMP, PIPES, TEST HEADS AND ALL APPLIANCES. LABOR, FUEL AND OTHER APPURTENANCES NECESSARY TO MAKE THESE TESTS.

(C.) THE HYDROSTATIC TEST PRESSURE SHALL BE FOR A DURATION OF A MINIMUM OF TWO (2) HOURS WITH ALL VALVES CLOSED DURING WHICH TIME THE INTERNAL PRESSURE SHALL REMAIN WITHIN 5 PSI OF THE SPECIFIED TEST PRESSURE. SHOULD THE TEST PRESSURE DROP MORE THAN 5 PSI, THE CONTRACTOR SHALL RECHARGE THE WATER MAIN TO THE SPECIFIED TEST PRESSURE AND LOCATE AND REPAIR THE LEAK TO THE SATISFACTION OF THE CITY. ANY DAMAGED OR DEFECTIVE PIPE, PIPE JOINTS, FITTINGS, VALVES, HYDRANTS OR APPURTENANCES SHALL BE REPAIRED OR REPLACED WITH SOUND MATERIAL AND THE HYDROSTATIC PRESSURE TEST REPEATED.

(D.) AFTER A SECTION OF THE WATER MAIN HAS BEEN TESTED, THE CONTRACTOR SHALL FLUSH THE SAME. IN THE CASE OF SUPPLY MAINS WHERE DRAINS ARE CONNECTED TO VALVE OR DRAIN VALVES, THE CONTRACTOR SHALL, WITHIN A REASONABLE TIME AFTER THE TEST HAS BEEN COMPLETED, PUMP ALL WATER OUT OF THE VAULTS. FLUSHING SHALL BE DONE IN ACCORDANCE WITH THESE SPECIFICATIONS.

(E.) IN COLD WEATHER IMMEDIATELY AFTER TESTING A SECTION OF THE WATER MAIN, THE CONTRACTOR SHALL OPEN ALL VALVES, AND IN THE CASE OF SUPPLY MAINS ALL AIR RELIEF VALVES, BYPASSES AND DRAINS AND PROPERLY DRAIN BONNETS OF ALL VALVES IN THE SECTION OF THE WATER MAIN, AND TAKE ALL OTHER PRECAUTIONS NECESSARY TO PREVENT INJURY TO WATER MAIN AND APPURTENANCES DUE TO FREEZING.

(G.) IN TESTING NEW MAINS, THE CONTRACTOR SHALL NOT BE PERMITTED TO USE ANY PART OF THE EXISTING MAINS IN HIS TEST UNLESS OTHERWISE SHOWN ON THE CONTRACT DRAWINGS. THE LIMITS OF THE HYDROSTATIC SHALL BE AS SHOWN ON THE PLANS. THE CONTRACTOR SHALL PROVIDE BLIND FLANGES, PLUGS OR CAPS, DEPENDING ON DESIGN, TO THE TESTED LENGTH OF THE PROPOSED MAIN SO THAT IT WILL BE COMPLETELY INDEPENDENT OF THE SAID EXISTING MAINS. PROPER RESTRAINT OF ALL BLIND FLANGES, PLUGS OR CAPS TO PREVENT BLOWOFF SHALL BE PROVIDED AND IN THE CASE OF DEAD END MAINS, CONCRETE PIERS WILL BE REQUIRED. NO EXTRA PAYMENT WILL BE MADE AND THE ENTIRE COST SHALL BE DEEMED TO BE INCLUDED IN THE BID PRICE.

WATER MAIN DISINFECTION

(A.) WATER MAIN DISINFECTION SHALL CONSIST OF: FLUSHING WATER MAINS AFTER THE HYDROSTATIC TEST AND PRIOR TO THE CHLORINATION PROCEDURE; THE CHLORINATION PROCEDURE, THE FINAL FLUSHING AND SAMPLING.

1. TAPS, TAPPING SADDLES, SERVICE PIPES, COMBINATION BLOWOFFS, AND EXISTING WATER MAINS WITH READILY ACCESSIBLE CONTROL VALVES, AND ALL PIPES, APPLIANCES, LABOR AND OTHER APPURTENANCES SHALL BE FURNISHED OR PROVIDED BY THE CONTRACTOR. THEY SHALL BE USED FOR INTRODUCING DISINFECTING AGENT AND WATER FOR FLUSHING INTO THE NEW OR EXTENDED WATER MAINS. TAPS OR SERVICE PIPES SHALL BE A MINIMUM ONE INCH (1") SIZE OF COPPER TO IRON PIPE THREAD CONFIGURATION. ADDITIONAL TAPS SHALL BE PROVIDED IF NECESSARY. ALL ONE INCH (1") TAPS ON DUCTILE IRON WATER MAINS WITH THICKNESS LESS THAN CLASS 56 WILL REQUIRE BRONZE DOUBLE STRAP TAPPING SADDLES, OR APPOROVED EQUAL, FURNISHED BY THE CONTRACTOR. COMBINATION BLOWOFFS AND SAMPLING TAPS SHALL BE: EITHER TAPPED OUTLET OR REGULAR BRANCH OUTLET TEES; AND/OR TAPPED PLUGS OR PIPE ENDS WHICH SHALL BE PLUGGED; OR HAVE ENDS CONNECTED TO WATER SYSTEM AFTER SATISFACTORY DISINFECTION AND FLUSHING. TAPPING OF WATER MAINS FOR CHLORINATION SHALL BE IN ACCORDANCE WITH THAT SPECIFIED IN PARAGRAPH "WORK TO BE DONE BY CITY".

2. ON EXISTING WATER MAINS AND ON NEW, RELOCATED OR EXTENDED WATER MAINS PLACED IN SERVICE ONLY THE CITY WILL OPERATE THE VALVES. THE CONTRACTOR WILL COOPERATE WITH CITY'S CHLOINATION CREW IN COORDINATING THE CHLORINATION AND FLUSHING IN DETERMINING THE AMOUNTS AND EXTENT OF CHLORINATION AND FLUSHING.

3. SUCH LENGTHS OF THE WATER MAIN AS THE CITY MAY DETERMINE, SHALL BE CHLORINATED, HOWEVER IN NO CASE SHALL THE LENGTH EXCEED THAT WHICH CAN BE CHLORINATED SATISFACTORY IN ONE (1) WORK DAY. SUCH MAXIMUM LENGTH IS GENERALLY UP TO THREE (3) MILES TOTAL, INCLUDING BRANCHES AND CONNECTING WATER MAIN(S), FOR SIXTEEN INCH (16") AND SMALLER; AND THREE (3) VALVE SECTIONS, OR TWO (2) MILES, FOR TWENTY INCH (20") OR LARGER WATER MAINS.

4. THE CONTRACTOR SHALL PREPARE AND PRESENT TO THE CITY FOR APPROVAL A PLAN FOR ALL DISINFECTION FROM THE HYDROSTATIC TESTING TO THE FINAL FLUSHING FOR THEN NEW OR EXTENDED WATER MAIN, INCLUDING ANY BRANCHES. THE DISINFECTION PLAN SHALL SHOW COMPLETE LAYOUT, INCLUDING SIZES AND LOCATION OF: (A) FLUSHING WATER SOURCE; (B) WATER SOURCE FOR CHLORINATION UITLIZING CALCIUM HYPOCHLORITE SOLUTION FURNISHED IN MIXING DRUM; (C) BLENDING WATER SOURCE TO ASSURE PROPER AND UNIFORM CONCENTRATION OF CHLORINATION SOLUTION THROUGHOUT THE WATER MAIN TO BE DISINFECTED; (D) OUTLETS TO BE UTILIZED OR PROVIDED FOR THE DRAWING AND FINAL FLUSHING OF CHLORINE SOLUTION THROUGH AND FROM THE WATER MAIN BEING DISINFECTED; AND (E) TYPE, NUMBER, SEQUENCE AND SIZES OF OUTLETS INCLUDING FIRE HYDRANTS AND VALVES TO BE OPERATED.

Stokes 0031 (4:0221) SFN: 1833936

WATERWORK NOTES

GENERAL (CONTINUED)

WATER MAIN DISINFECTION (CONTINUED)

5. BEFORE HYDROSTATIC TESTING WILL BE PERMITTED, THE CONTRACTOR SHALL OBTAIN FROM THE CITY, DIVISION OF WATER AND HEAT, PERMITS AND SALES, MISCELLANEOUS SERVICE RECEIPT (MR CARD). APPROVED WATER MAIN PLANS OF THE NEW WATER MAIN OR EXTENSION SHALL BE USED IN PREPARATION OF THE PLAN FOR DISINFECTION. UPON RECEIPT OF APPROVAL BY THE COMMISSIONER OF WATER AND HEAT OF THE PLAN FOR DISINFECTION, THE CONTRACTOR SHALL SUBMIT THE PLANS TO THE INSPECTION AND ENFORCEMENT RESIDENT INSPECTOR ALONG WITH THE MISCELLANEOUS SERVICE RECEIPT (MR CARD). ONLY UPON RECEIPT OF THE PLANS AND MR CARD WILL THE CHLORINATION PROCEDURE BE PERFORMED. THE CITY'S CHLORINATION CREW WILL INSPECT THE ENTIRE JOB AS TO BEING IN ACCORDANCE WITH APPROVED PLANS AND FOOTAGE LENGTH ON MAINS TO BE CHLORINATED.

6. CHLORINATION PROCEDURE FOR DISINFECTING NEW OR EXTENDED WATER MAINS SHALL BE BY THE CONTINUOUS FEED METHOD USING A SOLUTION FORMED BY MIXING WATER AND CALCIUM HYPOCHLORITE. NO OTHER FORM OF CHLORINE WILL BE USED. AMERICAN WATER WORKS ASSOCIATION AWWA STANDARD FOR DISINFECTING WATER MAINS – ANSI/AWWA C–651–86 SHALL BE FOLLOWED AS TO NEED, PROCEDURES, METHODS, HOLDING TIME, FREE CHLORINE RESIDUAL, APPLICATION AND CONFINEMENT TO WATER MAIN BEING DISINFECTED. WATER USED FOR CHLORINATION, AND TO FEED DOSAGE INTO FULL LENGTH OF MAINS TO BE DISINFECTED SHALL BE OBTAINED AS FOR TESTING.

7. THE CITY WILL SUPPLY THE PUMP, SOLUTION MIXING PADDLE, 35 GALLON DRUM, GASOLINE POWERED ELECTRIC GENERATOR, AND SUPPLY OF POWDERED CALCIUM HYPOCHLORITE. THE CONTRACTOR SHALL SUPPLY ALL PIPES, HOSES, VALVES, FITTINGS, ETC., FOR USE EITHER TO CONVEY WATER, CHLORINS SOLUTION OR COMBINATION THEREOF AND TO DISPOSE OF HIGHLY CHLORINATED WATER FLUSHED TO WASTE.

8. THE CONTRACTOR SHALL COOPERATE WITH THE CITY'S CHLORINATION CREW OR RESIDENT INSPECTOR BY OPERATING ANY REQUIRED WATER MAIN APPURTENANCES TO ASSURE THE DISINFECTION OF SUCH APPURTENANCES AND OF ANY PIPE BRANCHES TO ASSURE CHLORINATION SOLUTION IS CONFINED TO WATER MAIN BEING DISINFECTED.

9. THE WATER DEPARTMENT CHLORINATION CREW WILL DETERMINE THE LENGTH OF TIME THE CHLORINE SOLUTION IS TO BE HELD IN THE WATER MAIN BEING DISINFECTED.

(B.) FLUSHING

1. BEFORE DISINFECTION ALL DIRT AND FOREIGN MATTER SHALL BE REMOVED FROM THE NEW WATER MAIN OR EXTENSIONS TO EXISTING MAINS BY A THOROUGH FLUSHING THROUGH THE HYDRANTS OR BY OTHER APPROVED MEANS. EACH VALVE SECTION OF THE NEWLY LAID PIPE SHALL BE FLUSHED INDEPENDENTLY. THIS SHALL BE DONE AFTER THE PRESSURE TEST. FLUSHING SHALL BE IN ACCORDANCE WITH ANSI/AWWA C 651 STANDARD FOR DISINFECTING WATER MAINS. WHERE THE FLUSHING VELOCITY SPECIFIED THEREIN CANNOT BE ATTAINED, FLUSHING RATES AS DETERMINED BY THE DIRECTOR TO BE SUFFICIENT SHALL BE PERMITTED. IF IN THE OPINION OF THE DIRECTOR THE FLUSHING PRIOR TO THE CHLORINATION PROCEDURE DOES NOT REMOVE DIRT OR OTHER ACCUMULATIONS IN THE PIPE, THE PIPE SHALL BE CLEANED BY MECHANICAL MEANS BY THE CONTRACTOR AND THE FLUSHING SHALL BE REPEATED.

2. THE FLUSHING OF THE CHLORINATION SOLUTION SHALL BE DONE BY THE CITY UNTIL THE CHLORINE SOLUTION IS TOTALLY FLUSHED OUT OF THE SYSTEM BEING DISINFECTED. THE CITY SHALL OBTAIN WATER FOR FLUSHING IN THE SAME MANNER AS FOR TESTING.

3. IN FLUSHING, THE CITY SHALL PROPERLY DISPOSE OF THE CHLORINATION SOLUTION. IN CASES WHERE DIRECT DISPOSAL IS NOT APPROVED, THE CITY SHALL NEUTRALIZE THE CHLORINE SOLUTION AS PROVIDED IN APPENDIX B OF AWWA C–651.

4. THE CITY'S CHLORINATION CREW WILL DETERMINE WHEN THE DISINFECTION SOLUTION HAS BEEN SATISFACTORY FLUSHED FROM THE MAIN AND BRANCHES.

(C.) SAMPLING

1. A TIME PERIOD AS DETERMINED BY THE CITY SHALL ELAPSE BEFORE WATER SAMPLES ARE TAKEN FROM THE WATER MAIN(S) AND BRANCH(ES) TO DETERMINE THE BACTERIOLOGICAL QUALITY OF THE WATER THEREIN. IN NO CASE, SHALL THE TIME PERIOD BE LESS THAN TWENTY–FOUR (24) HOURS. NO SAMPLES SHALL BE TAKEN FROM FIRE HYDRANTS. THE CONTRACTOR SHALL ASSIST THE CITY'S CHLORINATION CREW IN OBTAINING SAMPLES. THE CITY WILL FURNISH ALL CONTAINERS AND CONTROL PROCEDURES FOR OBTAINING SAMPLES. THE CITY WILL DETERMINE THE NUMBER AND LOCATIONS OF SAMPLES TO BE TAKEN FROM THE DISINFECTED SECTIONS. THE CITY WILL DETERMINE THE BACTERIOLOGICAL QUALITY OF THE WATER SAMPLES, IF SAMPLING RESULTS IN TWO (2) CONSECUTIVE POSITIVE SAMPLES, THE PROCEDURE OF CHLORINATION, FLUSHING AND SAMPLING SHALL BE REPEATED. FIGURE 1, SUGGESTED COMBINATION AND SAMPLING TAP, TAKEN FROM AWWA C–651, IS HEREIN MADE A PART OF THESE SPECIFICATIONS.

2. IN CASES WHERE THE LENGTH OF WATER MAIN IS LESS THAN 350 FEET, AFTER HYDROSTATIC TESTING ONLY, PRELIMINARY FLUSHING AND SAMPLING WILL BE DONE: HOWEVER, IF THERE ARE TWO (2) POSITIVE SAMPLES, AFTER FLUSHING, THE ENTIRE PROCEDURE OF PRELIMINARY FLUSHING, CHLORINATION, FLUSHING AND SAMPLING SHALL BE REQUIRED. THE CITY'S CHLORINATION CREW WILL COMPLETE AND DISTRIBUTE THE CHLORINATION APPROVAL FORM.

CONTRACTOR'S LABOR

THE CONTRACTOR SHALL FURNISH AT LEAST TWO (2) TRAINED WORKMEN TO PERFORM ALL LABOR UNDER THE SUPERVISION AND DIRECTION OF THE CITY'S CHLORINATION CREW THE CONTRACTOR'S LABORERS SHALL PERFORM ALL DUTIES SPECIFIED IN WATER MAIN DISINFECTION GENERAL NOTE. THE CONTRACTOR SHALL PROVIDE PROPER EQUIPMENT AND PROTECTIVE CLOTHING AS MAY BE REQUIRED BY THE LABORERS IN PERFORMING THE NEEDED TASK. THE CITY WILL MIX THE CHLORINATION SOLUTION TO BE USED BY THE CONTRACTOR FOR DISINFECTING.

ACCESS PITS

(A.) THE CONTRACTOR SHALL PROVIDE TIGHTLY WOOD SHEETED ACCESS PITS, CONFORMING TO THE REQUIREMENTS OF THE SPECIFIC SAFETY REQUIREMENTS OF THE INDUSTRIAL COMMISSION OF OHIO RULE IC–3–11, FOR ACCESS TO ALL WATER MAIN APPURTENANCES TO BE UTILIZED IN DISINFECTING WATER MAINS.

(B.) THE CONTRACTOR SHALL HAVE ON HAND READY FOR USE, PUMPING EQUIPMENT TO DEWATER ANY AND ALL ACCESS PITS USED FOR DISINFECTING WATER MAINS AND SHALL DEWATER THE ACCESS PITS WHEN ORDERED BY THE DIRECTOR.

CONNECTION OF NEW MAINS

WHEN THE NEW MAINS HAVE BEEN TESTED AND CHLORINATED AND ARE READY TO BE CONNECTED TO THE OLD MAIN, THE CONTRACTOR SHALL MAKE SUCH CONNECTIONS AT A TIME DESIGNATED BY THE CITY. PRIOR TO SHUTTING DOWN THE EXISTING MAINS, THE CONTRACTOR SHALL TAKE SUITABLE PRECAUTIONS TO ASSURE A MINIMUM INTERRUPTION TO SERVICE, INCLUDING THE FOLLOWING:

(A) PERFORM ALL NECESSARY EXCAVATION, INCLUDING BELL HOLES, EXPOSING THE EXISTING MAIN SUFFICIENTLY FOR THE OPERATION OF THE PIPE SAW BY THE CITY, OR PIPE CUTTING BY THE CONTRACTOR.

(B) REMOVE THE CAP OR PLUG FROM THE END OF THE NEW MAIN.

(C) SWAB THE INSIDE OF ALL PIPES, BENDS AND SLEEVES TO BE USED IN CONNECTION THOROUGHLY WITH A CHLORINE SOLUTION OF AT LEAST 100 P.P.M.

(D) MAKE UP AS MUCH OF THE CONNECTION AS POSSIBLE OUTSIDE THE DITCH TO ELIMINATE THE NEED FOR MAKING MOST OF THE NECESSARY JOINTS DURING THE SHUTDOWN. BY CAREFUL MEASUREMENT ALL PIPE CUTS CAN BE MADE BY THE CONTRACTOR PRIOR TO SHUTTING DOWN.

(E) HAVE SUFFICIENT MANPOWER AND EQUIPMENT ON THE SITE TO PERFORM THE OPERATION IN A MINIMUM OF TIME.

PAINTING

(A) IT IS THE INTENTION OF THESE SPECIFICATIONS TO PROVIDE THAT ALL METAL WORK SUBJECT TO CORROSION SHALL BE SATISFACTORILY PROTECTED BY A DURABLE COATING OF PAINT OR OTHER APPROVED MATERIAL AND THAT ALL METAL SURFACES NOT BURIED IN EARTH, OR IN CONCRETE SHALL BE LEFT CLEAN AND WELL PAINTED AT THE COMPLETION OF THE CONTRACT. UNLESS OTHERWISE SPECIFIED, THE PROTECTION SHALL BE AT LEAST THAT GIVEN BY THREE (3) COATS OF APPROVED PAINT. THE FIRST COAT IS TO BE APPLIED AT THE SHOP BEFORE THE METAL HAS RUSTED AND AFTER ALL GREASE, DIRT AND SCALE HAS BEEN REMOVED. BOLTS AND NUTS SHALL NOT BE SHOP COATED, BUT SHALL RECEIVE THREE (3) COATS OF APPROVED PAINT AFTER INSTALLATION.

(B) ALL METAL WORK WHICH HAS NOT BEEN COATED BEFORE THE ARRIVAL ON THE JOB SHALL BE GIVEN A TEMPORARY PROTECTIVE COATING OF SUCH NATURE AS TO PERMIT THE READY ADHERENCE OF FUTURE COATINGS. THE TEMPORARY COATING SHALL BE A GOOD GRADE ASPHALTIC PAINT OR OTHER APPROVED MATERIAL. THE TEMPORARY PROTECTION SHALL APPLY PARTICULARLY TO THE VALVE BOXES AND COVERS, MANHOLE RINGS AND COVERS, LADDERS AND LADDER RUNGS, DRESSER TYPE COUPLINGS AND ELSEWHERE WHEN IN THE OPINION OF THE CITY, SUCH PROTECTION IS NECESSARY.

(C) ALL SURFACES OF METAL WHICH WILL BE IN CONTACT AFTER ASSEMBLING SHALL BE PAINTED, AT LEAST ONE COAT, BEFORE ASSEMBLING. THE FINAL COAT OF PAINT ON ALL EXPOSED WORK SHALL BE GIVEN SHORTLY BEFORE THE COMPLETION OF THE CONTRACT.

(D) WHERE PAINTING CLAUSES APPEAR HEREINAFTER, THEY SHALL TAKE PRECEDENCE OVER THIS SECTION, EXCEPT THAT TEMPORARY PROTECTION HEREIN DESCRIBED MAY BE REQUIRED.

(E) ALL OF THIS WORK SHALL BE INCLUDED IN THE PRICE BID FOR THE PARTICULAR ITEM REQUIRING THE PAINTING.

TESTS, INSPECTION AND REPORTS

NOTWITHSTANDING THE REQUIREMENTS OF ANY OTHER PROVISIONS OF THESE SPECIFICATIONS, THE CONTRACTOR SHALL ARRANGE FOR AND PAY ALL COSTS INVOLVED FOR SHOP INSPECTION OF ALL MATERIALS FURNISHED, MANUFACTURE OF ALL PIPE, VALVES, FITTINGS, ETC., FIELD AND SHOP WELDS AND WELDING, AND FURNISH TO THE STATE AND THE CITY OF CLEVELAND COPIES OF ALL SHOP, FABRICATION, MANUFACTURE AND OTHER RELATED INSPECTION REPORTS OF MATERIALS FURNISHED. THIS INSPECTION SHALL BE DONE BY A RECOGNIZED INSPECTION LABORATORY APPROVED BY THE CITY OF CLEVELAND. IN THE CASE OF ANY ITEM NOT SPECIFICALLY MENTIONED IN THE "WATERWORK NOTES," OHIO DEPARTMENT OF TRANSPORTATION CONSTRUCTION AND MATERIAL SPECIFICATIONS – JANUARY 1, 1993 SHALL GOVERN.

HANDLING PIPE AND ACCESSORIES

(A) UNLOADING PIPE, FITTINGS, VALVES, HYDRANTS, AND OTHER ACCESSORIES SHALL, UNLESS OTHERWISE DIRECTED, BE UNLOADED AT THE POINT OF DELIVERY, HAULED TO AND DISTRIBUTED AT THE SITE OF THE PROJECT BY THE CONTRACTOR. THEY SHALL AT ALL TIMES BE HANDLED WITH CARE TO AVOID DAMAGE. IN LOADING AND UNLOADING, THEY SHALL BE LIFTED BY HOISTS OR SLID, OR ROLLED ON SKIDWAYS IN SUCH MANNER AS TO AVOID SHOCK. UNDER NO CIRCUMSTANCES SHALL THEY BE DROPPED. PIPE HANDLED ON SKIDWAYS MUST NOT BE SKIDDED OR ROLLED AGAINST PIPE ALREADY ON THE GROUND.

(B) AT SITE OF WORK: IN DISTRIBUTING THE MATERIAL AT THE SITE OF THE WORK, EACH PIECE SHALL BE UNLOADED OPPOSITE OR NEAR THE PLACE WHERE IT IS TO BE LAID IN THE TRENCH.

(C) PROTECTION OF PIPE COATING: PIPE SHALL BE HANDLED IN SUCH MANNER THAT A MINIMUM AMOUNT OF DAMAGE TO THE COATING WILL RESULT. ANY PIPE OR FITTING, THE COATING OF WHICH HAS BEEN DAMAGED IN SHIPPING OR HANDLING, SHALL HAVE THE DAMAGED PORTION WELL CLEANED AND COVERED WITH AN ASPHALT PAINT, APPROVED BY THE CITY BEFORE BEING PLACED IN THE WORK. THE CONTRACTOR SHALL THOROUGHLY COAT ALL EXPOSED PART OF BOLTS AND NUTS WITH AN APPROVED ASPHALT PAINT, AFTER ALL PIPE HAS BEEN LAID AND BEFORE BACKFILLING HAS BEEN PLACED. ALL FIELD COATINGS SHALL BE FURNISHED BY THE CONTRACTOR.

(D) PROTECTION OF CONCRETE PIPE: IF, IN THE PROCESS OF MANUFACTURE, TRANSPORTATION, OR HANDLING, ANY CONCRETE PIPE OR SPECIAL RECEIVES ANY INDENTATION OR DEFORMATION TO THE CONCRETE, STEEL ENDS OR CONNECTIONS, THE REMOVAL OF WHICH WILL IN ANY DEGREE INJURE IT, SUCH PIPE OR SPECIAL SHALL BE REJECTED AND REPLACED AT THE CONTRACTOR'S EXPENSE.

(E) PIPE KEPT CLEAN: THE INTERIOR OF THE PIPE, FITTINGS, AND OTHER ACCESSORIES SHALL BE KEPT FREE FROM DIRT AND FOREIGN MATTER AT ALL TIMES.

(F) FROST PROTECTION: VALVES AND HYDRANTS BEFORE INSTALLATION SHALL BE DRAINED AND STORED IN A MANNER THAT WILL PROTECT THEM FROM DAMAGE BY FREEZING.

CHANGES IN WATER MAINS

(A) WHEREVER IT BECOMES NECESSARY, IN THE OPINION OF THE ENGINEER OR CITY TO CHANGE THE LOCATION OR ELEVATION OF WATER MAINS AND HYDRANTS AND WHERE CONNECTIONS ARE TO BE MADE BETWEEN EXISTING DISTRIBUTION MAINS AND WATER MAINS UNDER THIS CONTRACT, THE CONTRACTOR SHALL REMOVE AND DISPOSE OF ALL EXISTING WATER LINE MATERIALS REQUIRED TO MAKE THE CONNECTION, AND SHALL FURNISH AND INSTALL COMPLETE ALL THE DUCTILE IRON PIPE, PRESTRESSED CONCRETE CYLINDER PIPE, FITTINGS, AND VALVES TO MAKE THE CONNECTIONS INDICATED, EXCEPT TAPPING SLEEVES AND VALVES WHICH SHALL BE FURNISHED BY THE CONTRACTOR AND INSTALLED BY THE CITY. PRESSURE TAPS FOR DISTRIBUTION MAINS SHALL BE MADE BY THE CITY OF CLEVELAND DIVISION OF WATER AND HEAT. THE CONTRACTOR SHALL ALSO FURNISH ALL NECESSARY LABOR, MATERIALS, TOOLS, AND EQUIPMENT AND MAKE THE EXCAVATION, BACKFILL, AND REPAVING FOR SUCH CONNECTIONS. PAYMENT FOR THIS WILL BE INCLUDED IN PRICE BID UNDER APPROPRIATE ITEM FOR SIZE OF WATER MAIN OR CONNECTION TO BE INSTALLED. ALL PIPES, VALVES, AND APPURTENANCES REMOVED SHALL BECOME THE PROPERTY OF THE CONTRACTOR. (SEE WORK TO BE DONE BY THE CITY).

Stokes 0031 (4.021) SFN: 1833936

WATERWORK NOTES

GENERAL (CONTINUED)

WORK TO BE DONE BY THE CITY OF CLEVELAND

(A) THE CITY WILL INSTALL ALL BRANCH SLEEVES AND VALVES FURNISHED BY THE CONTRACTOR. THE CONTRACTOR SHALL SUPPLY THE BRANCH SLEEVES AND VALVES AND DO ALL THE NECESSARY EXCAVATION, BACKFILLING AND REPAVING REQUIRED THEREFORE. THE CONTRACTOR SHALL FURNISH ALL AIR COMPRESSORS REQUIRED FOR THE WORK.

(B) IN LOCATIONS WHERE BRANCH SLEEVES AND VALVES CANNOT BE INSTALLED, THE CONTRACTOR WILL BE REQUIRED TO CUT IN TEES AND SLEEVE–IN THE REMAINDER OF THE CUT SECTION OF THE EXISTING MAIN. TO SPEED UP THIS OPERATION, IT IS CALLED TO THE CONTRACTOR'S ATTENTION THAT THE WATER DEPARTMENT HAS ON HAND AT HARVARD YARDS MOTOR OPERATED PIPE CUTTERS WHICH ARE AVAILABLE FOR CUTTING PIPE BY CITY FORCES. COST INCLUDES THAT FOR LABOR, USE OF PIPE CUTTING MACHINE, AND TRUCK. THE CITY WILL CHARGE FOR CUTTING PIPE BY CITY FORCES. THE COSTS CHARGED MUST BE OBTAINED FROM THE PERMITS–SALES SECTION OF THE DIVISION OF WATER AND HEAT, PUBLIC UTILITIES BUILDING, 1201 LAKESIDE AVENUE, CLEVELAND, OHIO 44114. THE CONTRACTOR SHALL DO ALL NECESSARY EXCAVATION, BACKFILLING AND REPAVING AND ALL AIR COMPRESSOR AND CRANE SERVICE SHALL BE FURNISHED BY THE CONTRACTOR.

EXCAVATION

(A) THE CONTRACTOR SHALL REMOVE ALL EXISTING STRUCTURES, ROADWAYS, DRIVEWAYS AND OTHER SIMILAR MATERIALS AND MAKE ALL EXCAVATION NECESSARY FOR THE PROPER CONSTRUCTION OF THE WATER MAIN, PIPE CONNECTIONS AND APPURTENANT STRUCTURES, INCLUDING TUNNEL AND SHAFT EXCAVATION. THE EXCAVATION SHALL INCLUDE THE REMOVAL, HANDLING, REHANDLING AND DISPOSAL OF MATERIALS ENCOUNTERED IN THE WORK AND SHALL INCLUDE ALL PUMPING, BAILING, DRAINAGE, SHEETING AND BRACING. MOREOVER, THE CONTRACTOR MUST ASSUME ALL RESPOSIBILITY FOR ANY ADDED EXPENSE OR OTHER LIABILITY WHICH MAY ARISE BY MEANS OF QUICKSAND, OBSTACLES OR CONDITIONS FORESEEN AND UNFORESEEN OR ENCOUNTERED IN THE WORK OF THIS CONTRACT.

(B) TRENCHES SHALL IN EVERY CASE BE OF SUFFICIENT WIDTH TO PERMIT SOLID PACKING OF BACKFILL UNDER AND AROUND PIPES, AND SATISFACTORY CONSTRUCTION OF ALL APPURTENANCES AND FOR SUCH SHEETING AND SHORING, PUMPING AND DRAINING AS MAY BE NECESSARY.

(C) THE TRENCH SHALL BE DUG TO THE ALIGNMENT AND DEPTH REQUIRED AND ONLY SO FAR IN ADVANCE OF PIPE LAYING AS THE ENGINEER SHALL PERMIT. THE TRENCH SHALL BE SO BRACED AND DRAINED THAT WORKMEN MAY WORK THEREIN SAFELY AND EFFICIENTLY. IT IS ESSENTIAL THAT THE DISCHARGE FROM PLUMPS BE LED TO NATURAL DRAINAGE CHANNELS, TO DRAINS, OR TO SEWERS.

(D) THE TRENCH WIDTH MAY VARY WITH AND DEPEND UPON THE DEPTH OF TRENCH AND THE NATURE OF THE EXCAVATED MATERIAL ENCOUNTERED, BUT IN ANY CASE SHALL BE OF AMPLE WIDTH TO PERMIT THE PIPE TO BE LAID AND JOINTED PROPERLY AND OF THE BACKFILL TO BE PLACED AND COMPACTED PROPERLY. THE MINIMUM WIDTH OF UNSHEEETED, TRENCH SHALL BE EIGHTEEN (18) INCHES AND FOR PIPE TEN (10) INCHES OR LARGER; AT LEAST TWELVE (12) INCHES LARGER THAN THE OUTSIDE DIAMETER OF THE PIPE AND EIGHTEEN (18) INCHES LARGER THAN THE OUTSIDE DIAMETER OF THE PIPE FOR IRON AND STEEL PIPE, EXCEPT BY CONSENT OF THE ENGINEER. THE MAXIMUM CLEAR WIDTH OF TRENCH SHALL BE NOT MORE THAN TWO (2) FEET GREATER THAN THE OUTSIDE PIPE DIAMETER, WHEN SHEETING AND BRACING IS USED, THE TRENCH WIDTH SHALL BE INCREASED ACCORDINGLY.

(E) THE TRENCH, UNLESS OTHERWISE SPECIFIED, SHALL HAVE A FLAT BOTTOM CONFORMING TO THE GRADE TO WHICH THE PIPE IS TO BE LAID. THE PIPE SHALL BE LAID UPON SOUND SOIL CUT TRUE AND EVEN, SO THAT THE BARREL OF THE PIPE WILL HAVE A BEARING FOR ITS FULL LENGTH.

(F) ANY PART OF THE TRENCH EXCAVTED BELOW GRADE SHALL BE CORRECTED WITH APPROVED MATERIAL, THOROUGHLY COMPACTED.

(G) WHEN THE UNCOVERED TRENCH BOTTOM AT SUBGRADE IS SOFT AND IN THE OPINION OF THE ENGINEER CANNOT SUPPORT THE PIPE, A FURTHER DEPTH AND OR WIDTH SHALL BE EXCAVATED AND BACKFILLED TO PIPE FOUNDATION GRADE AS REQUIRED UNDER (F), OR OTHER APPROVED MEANS SHALL BE ADOPTED TO ASSURE A FIRM FOUNDATION FOR THE PIPE.

(H) LEDGE ROCK, BOULDERS, LARGE STONES, AND SHALE SHALL BE REMOVED TO PROVIDE A CLEARANCE OF AT LEAST SIX (6) INCHES BELOW ALL PARTS OF THE PIPE, VALVES, OR FITTINGS, AND A CLEAR WIDTH OF SIX (6) INCHES ON EACH SIDE OF ALL CONCRETE PIPE AND NINE (9) INCHES ON EACH SIDE OF ALL CAST IRON AND STEEL PIPE SHALL BE PROVIDED.

(I) EXCAVATION BELOW SUBGRADE IN ROCK, SHALE OR IN BOULDERS SHALL BE BACKFILLED TO SUBGRADE WITH APPROVED MATERIAL, THOROUGHLY COMPACTED.

(J) BELL HOLES OR AMPLE DIMENSIONS SHALL BE DUG IN EARTH TRENCHES AT EACH JOINT TO PERMIT THE JOINTING TO BE MADE PROPERLY. ADEQUATE CLEARANCE FOR PROPER JOINTING PIPE LAID IN ROCK SHALL BE PROVIDED AT BELL HOLES.

(K) THE USE OF EXCAVATING MACHINERY WILL BE PERMITTED EXCEPT IN PLACES WHERE ITS OPERATION WILL CAUSE DAMAGE TO TREES, BUILDINGS, OR EXISTING STRUCTURES ABOVE OR BELOW GROUND, IN WHICH CASE HAND METHODS SHALL BE EMPLOYED.

(L) TREES, FENCES, POLES AND ALL OTHER PROPERTY SHALL BE PROTECTED UNLESS THEIR REMOVAL IS AUTHORIZED. ANY PROPERTY DAMAGED SHALL BE SATISFACTORILY RESTORED BY THE CONTRACTOR.

(M) HYDRANTS UNDER PRESSURE, VALVE PIT COVERS, VALVE BOXES, CURB STOP BOXES FIRE OR POLICE CALL BOXES, OR OTHER UTILITY CONTROLS SHALL BE LEFT UNOBSTRUCTED AND ACCESSIBLE DURING THE CONSTRUCTION PERIOD.

(N) THE CONTRACTOR SHALL MAINTAIN ALL EXCAVATIONS IN GOOD ORDER DURING THE CONSTRUCTION, SO AS NOT TO HINDER OR INJURE THE PIPE LAYING, MASONRY OR OTHER WORK. HE SHALL TAKE ALL REASOMABLE PRECAUTIONS TO PREVENT MOVEMENT OF THE SIDES OF SUCH EXCAVATION, AND SHALL REMOVE AT HIS OWN EXPENSE ANY MATERIAL SLIDING INTO THE EXCAVATION.

SHEETING AND BRACING

(A) THE CONTRACTOR SHALL FURNISH AND PUT IN PLACE SUCH SHEETING AND BRACING AS MAY BE REQUIRED TO SUPPORT THE SIDES OF TRENCHES OR OTHER EXCAVATION AND SHALL REMOVE SUCH SHEETING AND BRACING, AS THE TRENCH OR EXCAVATION IS FIILED UP, UNLESS THE ENGINEER SHALL ORDER IT LEFT IN PLACE, IN WHICH CASE THE CONTRACTOR SHALL CUT THE PLANK OFF AT A HEIGHT AS ORDERED BY THE ENGINEER, OR AS CALLED FOR ON THE CONTRACT DRAWINGS. THAT PORTION OF THE TIMBER ORDERED TO BE LEFT IN PLACE WILL BE PAID FOR AT THE CONTRACT UNIT PRICE BID PER THOUSAND FEET BOARD MEASURE. NO PAYMENT WILL BE MADE FOR WASTED ENDS. A QUANTITY OF 0.5 M.B.F. HAS BEEN PROVIDED IN THE GENERAL SUMMARY FOR ITEM SPECIAL – SHEETING LEFT IN PLACE.

(B) FOR ALL EXCAVATIONS FOR THE WORK DESCRIBED HEREIN, THE CONTRACTOR SHALL FURNISH AND PLACE SHEETING AND BRACING SO AS TO REDUCE TO A MINIMUM THE POSSIBILITY OF INJURY OR DAMAGE TO THE SAME.

(C) IF THE ENGINEER IS OF THE OPINION THAT AT ANY POINT SUFFICIENT OR PROPER SUPPORTS, SHEETING, OR BRACINGS HAVE NOT BEEN PROVIDED, HE MAY ORDER ADDITIONAL SUPPORTS, SHEETING OR BRACING, AT THE EXPENSE OF THE CONTRACTOR, AND THE COMPLIANCE WITH SUCH ORDERS BY THE CONTRACTOR SHALL NOT RELIEVE OE RELEASE HIM FROM HIS RESPONSIBILITY FOR SUFFICIENCY OF SUCH SUPPORTS.

(D) SHEETING AND BRACING SHALL BE PROVIDED IN ACCORDANCE WITH RULE 1C–3–11 OF THE SAFETY REQUIREMENTS OF THE INDUSTRIAL COMMISSION OF OHIO.

PREQUALIFICATIONS OF CONTRACTOR FOR TAPPING

THAT THE COMMISSIONER OF WATER IS AUTHORIZED TO DEEM PERSONS OR FIRMS QUALIFIED TO TAP MAINS FOR SERVICE CONNECTION REINSTALLATION AFTER QUALIFICATIONS OF TAPPER, INSPECTION OF EQUIPMENT, AND PROVEN ABILITY AND WORKMANSHIP HAVE BEEN ESTABLISHED AS TO TAP SIZES TO HIS SATISFACTION. TO DETERMINE THE QUALIFICATIONS OF ANY PERSON OR FIRM TO TAP MAINS, THE COMMISSIONER OR HIS DESIGNEE SHALL WITNESS THE INSTALLATION OF A SERVICE CONNECTION IN A WATER MAIN UNDER PRESSURE AND INSPECT TAPPING EQUIPMENT TO BE USED BY TAPPER. UPON SUCCESSFUL COMPLETION OF A TAP SIZE, THE TAPPER SHALL BE CERTIFIED BY LETTER FROM THE COMMISSIONER TO THE DIRECTOR OF TRANSPORTATION OF TAPPER'S COMPETENCE AND QUALIFICATIONS. THIS QUALIFICATION MAY BE REVOKED BY THE COMMISSIONER OF WATER AND HEAT IF IT IS DETERMINED THAT THE TAPPER'S COMPETENCY IS NOT MAINTAINED OR EQUIPMENT IS CHANGED.

NO TAPPING SHALL BE DONE WITH OUT THE KNOWLEDGE AND APPROVAL OF THE DIVISION OF WATER AND HEAT INSPECTOR. FOR EACH TAP TO BE MADE TO REINSTALL A WATER SERVICE CONNECTION, THE TAPPER SHALL OBTAIN AND COMPLETE A CITY OF CLEVELAND "CITY METER REPAIRS HY" FROM C OF C 101–130A FROM THE INSPECTOR. FAILURE TO PRESENT FORM AT TIME OF COMPLETION OF REINSTALLATION SHALL BE CAUSE FOR IMMEDIATE DISQUALIFICATION.

ON CLASS 52 DUCTILE IRON WATER MAIN ALL SERVICE CONNECTIONS WILL REQUIRE A BRONZE DOUBLE STRAP TAPPING SADDLE.

REMOVAL OF EXCAVATED MATERIAL

(A) ALL SURPLUS MATERIAL AND SUCH OTHER MATERIAL AS THE ENGINEER MAY DEEM UNFIT FOR USE AS BACKFILL SHALL BE DISPOSED OF BY THE CONTRACTOR SO AS TO GIVE A MINIMUM OF INCONVENIENCE TO THE PUBLIC. IN CASE OF SETTLEMENT AFTER BACKFILL, THE CONTRACTOR SHALL SUPPLY SUFFICIENT MATERIAL SATISFACTORY TO THE ENGINEER TO MAKE UP FOR THE DEFICIENCY.

(B) IN THE STORING OF EXCAVATED MATERIAL, WHICH IS TO BE USED AS A BACKFILL, THE CONTRACTOR SHALL EXERCISE CARE SO AS TO AVOID INCONVENIENCING THE PUBLIC. IF IN THE OPINION OF THE ENGINEER IT IS NECESSARY TO REMOVE THIS EXCAVATED MATERIAL FROM THE STREET OR LOTS, THE CONTRACTOR SHALL BE REQUIRED TO DO SO.

(C) ANY MATERIAL WHICH MAY SPILL OR DRIP FROM VEHICLES BY HAULING IN THE STREETS SHALL BE REMOVED AND THE STREETS CLEANED BY THE CONTRACTOR, TO THE SATISFACTION OF THE ENGINEER.

(D) WHEN SO DIRECTED BY THE ENGINEER, THE CONTRACTOR SHALL IMMEDIATELY REMOVE ALL EXCAVATED MATERIALS FROM THE SITE.

LAYING PIPE

(A) PROPER IMPLEMENTS, TOOLS, AND FACILITIES, SATISFACTORY TO THE ENGINEER, SHALL BE PROVIDED AND USED BY THE CONTRACTOR FOR THE SAFE AND CONVENIENT PROSECUTION OF THE WORK. ALL PIPE, FITTINGS, AND VALVES SHALL BE CAREFULLY LOWERED INTO THE TRENCH, PIECE BY PIECE, BY MEANS OF DERRICK, PROPER RINGS, AND OTHER SUITABLE TOLLS OR EQUIPMENT, IN SUCH MANNER AS TO PREVENT DAMAGE TO PIPE OR COATING. UNDER NO CIRCUMSTANCES SHALL PIPE OR ACCESSORIES BE DROPPED OR DUMPED INTO THE TRENCH. IN ANY DEFECTIVE PIECE IS DISCOVERED WHILE PIPE IS SUSPENDED OR AFTER BEING LAID, A NEW PIECE SHALL BE FURNISHED AND INSTALLED BY THE CONTRACTOR.

(B) ALL FOREIGN MATTER OR DIRT SHALL BE REMOVED FROM THE INSIDE OF THE PIPE BEFORE IT IS LOWERED INTO ITS POSITION IN THE TRENCH, AND IT SHALL BE KEPT CLEAN BY APPROVED MEANS DURING AND AFTER LAYING.

(C) AT TIMES WHEN PIPE LAYING IS NOT IN PROGRESS, THE OPEN ENDS OF PIPE SHALL BE CLOSED BY APPROVED MEANS, AND NO TRENCH WATER SHALL BE PERMITTED TO ENTER THE PIPE. NO PIPE SHALL BE LAID IN WATER, OR WHEN THE TRENCH CONDITIONS OR THE WEATHER IS UNSUITABLE FOR SUCH WORK, EXCEPT BY PERMISSION OF THE ENGINEER.

(D) WHEREVER NECESSARY. TO DEFLECT PIPE FROM A STRAIGHT LINE, EITHER IN THE VERTICAL OR HORIZONTAL PLANE TO AVOID OBSTRUCTIONS, TO PLUMB STEMS, OR FOR OTHER REASONS, THE DEGREE OF DEFLECTION SHALL BE APPROVED BY THE ENGINEER.

(E) BEFORE LAYING DUCTILE IRON PIPE, ALL LUMPS, BLISTERS AND EXCESS COAL TAR COATING SHALL BE REMOVED FROM THE BELL AND SPIGOT ENDS OF EACH PIPE. THE PIPE ENDS SHALL THEN BE KEPT CLEAN UNTIL JOINTS ARE MADE.

(F) BEFORE LAYING CONCRETE PIPE, THE PIPE ENDS SHALL BE MADE SMOOTH WITH EMERY CLOTH, FILE OR OTHER APPROVED MEANS, WIRE BRUSHED AND WIPED UNTIL CLEAN AND DRY. PIPE ENDS SHALL BE KEPT CLEAN UNTIL JOINTS ARE MADE. AFTER CLEANING AND DRYING, ALL CONTACT SURFACES OF THE GASKETS AND STEEL JOINT RINGS SHALL BE COATED WITH AN APPROVED FLAX SOAP BEFORE ENTERING THE SPIGOT ENDS INTO THE SOCKET. IMMEDIATELY AFTER THE JOINT AND THE PIPE SHALL BE SECURED WITH EARTH OR SAND AS REQUIRED, CAREFULLY TAMPED UNDER AND ON EACH SIDE UP TO THE SPRING–LINE OF THE PIPE, INCLUDING THE BELL HOLES. ALL BLOCKING SHALL BE REMOVED WHEM BACKFILL HAS REACHED THE SPRING–LINE FOR THE PIPE.

FLOATING

THE CONTRACTOR SHALL TAKE EVERY PRECAUTION AGAINST THE FLOATING OF THE PIPE DUE TO WATER COMING INTO THE TRENCH, OR THROUGH CAVING IN, FLUSHING OR PUDDLING. IN CASE OF SUCH FLOATING THE CONTRACTOR SHALL REPLACE THE PIPE AT IS OWN EXPENSE AND MAKE WHOLLY GOOD ANY INJURY OR DAMAGE WHICH MAY HAVE RESULTED.

PLUGGING DEAD ENDS

STANDARD RESTRAINED PLUGS WITH CLAMPS SHALL BE INSERTED INTO THE BELLS OF ALL DEAD ENDS OF PIPES, TEES, OR CROSSES, AND SPIGOT ENDS SHALL HAVE RESTRAINED CAPS AND CLAMPS INSTALLED BY THE CONTRACTOR, ON ALL MAINS CONSTRUCTED BY HIM AND ON EXISTING WATER MAINS WHERE INDICATED IN THE CONTRACT DRAWINGS, OR ORDERED BY THE CITY. THE COST OF FURNISHING AND INSTALLING THE PLUGS IN NEW WATER MAINS SHALL BE INCLUDED IN THE PER LINEAR FOOT PRICE BID FOR EACH "ITEM SPECIAL – PLUGGING EXISTING WATER MAINS AND BRANCHES," CLASSIFIED AS TO SIZE AS SHOWN ELSEWHERE IN THESE PLANS. PAYMENT FOR TEMPORARY PLUGS OR CAPS FOR TESTING AND CHLORINATION SHALL BE INCLUDED IN THE UNIT PRICE BID PER LINEAR FOOT OF WATER MAIN TO BE TESTED AND CHLORINATED.

Stokes 0031 (4:021) SFN: 1833936

WATERWORK NOTES

CALC. BY DATE	CUYAHOGA COUNTY	OHIO
CHKD. BY DATE	CUY – FAIRHILL ROAD	FHWA REGION 5

20/58

6/13

GENERAL (CONTINUED)

BACKFILLING

(A). BACKFILLING SHALL CONSIST OF A SAND BEDDING BACKFILL AND BACKFILL, UNLESS OTHERWISE SPECIFIED, OR WHERE PREMIUM BACKFILL IS REQUIRED, MADE WITH MATERIAL EXCAVATED FROM THE TRENCHES, PROVIDING THE SAME IS SATISFACTORY TO THE ENGINEER AND THE CITY. IF, IN THE OPINION OF THE ENGINEER AND THE CITY, THE MATERIAL EXCAVATED IS UNSATISFACTORY, THEN THE CONTRACTOR SHALL FURNISH AT HIS OWN EXPENSE OTHER SUITABLE MATERIAL FOR BACKFILL. ALL BACKFILL MATERIAL SHALL BE FREE FROM SLAG, CINDERS, RUBBISH, AND OTHER OBJECTIONABLE MATERIAL. BACKFILL SHALL BE PLACED INTO THE TRENCH AND NOT DOZED OR DUMPED FROM THE TOP OF THE TRENCH. THIS WORK INCLUDES ALL BACKFILLING, TOGETHER WITH RAMMING, PUDDLING, AND ROLLING, AS REQUIRED; THE FURNISHING OF SAND BEDDING BACKFILL, SUITABLE MATERIAL FOR BACKFILL, INCLUDING PREMIUM BACKFILL; AND ALL APPURTENANT WORK INCIDENTAL THERETO.

(B). BEFORE LAYING THE PIPE, THE BOTTOM OF THE TRENCH SHALL BE BROUGHT TO THE GRADE OF THE BOTTOM OF THE PIPE, EXCEPT AT PIPE JOINTS. WHEREVER THE BOTTOM OF THE TRENCH HAS BEEN EXCAVATED BELOW THE BOTTOM OF THE PIPE, THE CONTRACTOR SHALL PLACE SAND BEDDING, OR OTHER APPROVED MATERIAL SATISFACTORY TO THE ENGINEER AND THE CITY, TO BRING THE BOTTOM OF THE TRENCH TO THE GRADE OF THE BOTTOM OF THE PIPE. THIS SAND BEDDING SHALL BE THOROUGHLY TAMPED BEFORE THE PIPE IS PLACED IN THE TRENCH.

(C). THE BEDDING BACKFILL THREE (3) INCHES UNDER, AROUND AND TO A DEPTH OF ONE (1) FOOT ABOVE THE TOP OF ALL PIPE, SHALL BE MADE WITH SAND, WHICH MATERIAL SHALL BE FREE FROM STONE AND OTHER OBJECTIONABLE MATERIAL NOTED ABOVE IN PARAGRAPH (A) AND HEREIN. THE SAND USED FOR BEDDING BACKFILL SHALL BE A NATURAL BANK SAND, GRADED FROM FINE TO COARSE, NOT LUMPY OR FROZEN, AND FREE FROM SLAG, CINDERS, ASHES, RUBBISH, OR OTHER DELETERIOUS OR OBJECTIONABLE MATERIAL. THE SAND USED FOR BEDDING BACKFILL SHALL NOT CONTAIN A TOTAL OF MORE THAN 10% BY WEIGHT OF LOAM AND CLAY, AND ALL SUCH MATERIAL MUST BE CAPABLE OF BEING PASSED THROUGH A 3/4 INCH SIEVE. NOT MORE THAN 5% SHALL REMAIN ON A #4 SIEVE. THE CONTRACTOR MUST USE SPECIAL CARE IN PLACING THIS PORTION OF THE SAND BEDDING BACKFILL, SO AS TO AVOID SCRAPING OF THE EXTERIOR COATING, INJURING THE PIPE, AND DISTORTING OR MOVING THE PIPE WHEN COMPACTING THE SAME. THE SAND BEDDING BACKFILL SHALL BE TAMPED IN THIN LAYERS OF SIX (6) INCHES, SIMULTANEOUSLY ON EACH SIDE OF THE PIPE, AND THOROUGHLY COMPACTED SO AS TO PROVIDE A SOLID BACKING AGAINST THE EXTERNAL SURFACE OF THE PIPE.

(D). BACKFILL ABOVE THE ONE (1) FOOT SAND BEDDING BACKFILL SHALL BE MADE WITH MATERIAL SPECIFIED HEREIN IN EITHER PARAGRAPH (A) OR AS SPECIFIED HEREIN FOR PREMIUM BACKFILL IN PARAGRAPH (G).

(E). PREMIUM BACKFILL SHALL BE PLACED WHERE EXISTING AND FUTURE PERMANENT PAVEMENT, SIDEWALKS, DRIVEWAYS, SEWER PIPE CROSSINGS AND CURB CROSSINGS HAVE BEEN OPEN OR UNDERCUT. THE PLACEMENT OF PREMIUM BACKFILL ALSO APPLIES TO ALL EXCAVATION WITHIN THREE (3) FEET OF EXISTING OR FUTURE PERMANENT PAVEMENT, SIDEWALKS, DRIVEWAYS, SEWER PIPE CROSSINGS AND CURB CROSSINGS. IF PART OF THE TRENCH IS UNDER EXISTING OR FUTURE PAVEMENT, SIDEWALK, DRIVEWAY OR CURB THE ENTIRE TRENCH SHALL BE BACKFILLED WITH PREMIUM BACKFILL MATERIAL SPECIFIED HEREIN.

(F). ONLY AFTER THE ONE (1) FOOT SAND BEDDING BACKFILL HAS BEEN SATISFACTORILY COMPACTED, MAY WORK PROCEED IN PLACING THE REMAINING BACKFILL WHICH MUST BE CAREFULLY PLACED AND COMPACTED BY TAMPING, PUDDLING, OR ROLLING. ALL PRECAUTIONS MUST BE TAKEN TO ELIMINATE FUTURE SETTLEMENT. THE NUMBER OF MEN TAMPING SHALL BE NOT LESS THAN THE NUMBER BACKFILLING, AND ADDITIONAL MEN SHALL BE KEPT IN THE TRENCH TO SPREAD THE MATERIAL.

(G). PREMIUM BACKFILL SHALL CONSIST OF LIMESTONE SCREENINGS. THE PREMIUM BACKFILL SHALL BE READILY INCORPORATED IN AN 8-INCH LAYER AND SHALL BE IN ACCORDANCE WITH OHIO DEPARTMENT OF TRANSPORTATION CONSTRUCTION AND MATERIALS SPECIFICATIONS, ITEM 304, MEETING THE FOLLOWING REQUIREMENTS:

SIEVE	% PASSING GRADING
2-INCH	100
1-INCH	70-100
3/4-INCH	50-90
NO. 4	30-60
NO. 30	9-33
NO. 200	0-13

THE FRACTION OF THESE MATERIALS PASSING A #40 SIEVE SHALL HAVE A LIQUID LIMIT NOT GREATER THAN 30 (THIRTY) AND A PLASTICITY INDEX NOT GREATER THAN 6 (SIX).

SLAG; NATURAL OR SYNTHETIC CRUSHED AGGREGATE SUCH AS BROKEN OR CRUSHED ROCK; CRUSHED CONCRETE; OR OTHER TYPE OF MATERIAL IN LIEU OF THE SAND BEDDING BACKFILL AND THE LIMESTONE SCREENING BACKFILL MATERIAL WILL NOT BE PERMITTED.

THE MINIMUM COMPACTION FOR ALL SAND BEDDING BACKFILL, BACKFILL AND PREMIUM BACKFILL SHALL BE 95 % STANDARD PROCTER.

(H). BACKFILLING SHALL NOT BE DONE IN FREEZING WEATHER, EXCEPT BY PERMISSION OF THE ENGINEER AND THE CITY, AND IT SHALL NOT BE MADE WITH FROZEN MATERIAL, NOR SHALL ANY FILL BE MADE WHERE THE MATERIAL ALREADY IN THE DITCH IS FROZEN.

(I). SPECIAL TREATMENT OF THE TRENCH WILL BE REQUIRED WHERE CINDER EXCAVATION, EXCEEDING ONE (1) FOOT MEASURED FROM THE GROUND OR PAVEMENT SURFACE IS ENCOUNTERED. BEFORE LAYING THE PIPE, THE BOTTOM OF THE TRENCH SHALL BE DUG EIGHT (6) INCHES BELOW PIPE GRADE AND THEN BROUGHT TO THE GRADE OF THE PIPE IN THE FOLLOWING MANNER. A FOUR (4) INCH LAYER OF CRUSHED LIMESTONE SHALL BE PLACED ON THE ENTIRE WIDTH OF THE BOTTOM OF THE TRENCH, FOLLOWED BY A FILLER OF HYDRATED LIME AND A LAYER OF SAND BEDDING TO SIX (6) INCHES ABOVE THE TOP OF THE PIPE. THE FOUR (4) INCH CRUSHED LIMESTONE SHALL BE WELL GRADED FROM FINE TO COARSE, AND FREE FROM SLAG, CINDERS, ASHES, RUBBISH OR OTHER OBJECTIONABLE MATERIAL. ALL LIMESTONE MUST BE CAPABLE OF BEING PASSED THROUGH A 3/4 INCH SIEVE. ON TOP OF THIS LAYER OF CRUSHED LIMESTONE, HYDRATED LIME SHALL BE SUPPLIED IN THE AMOUNT OF 3/8 OF A POUND PER SQUARE FOOT OF TRENCH. THIS BED OF CRUSHED LIMESTONE, WITH FILLER OF HYDRATED LIME IN PLACE, SHALL BE THOROUGHLY TAMPED BEFORE THE PIPE IS LAID IN THE TRENCH AND THE SAND BEDDING BACKFILL IS PLACED. THE SAND BEDDING BACKFILL SHALL BE FOR THREE (3) INCHES UNDER, AROUND AND TO A DEPTH OF SIX (6) INCHES ABOVE THE TOP OF THE PIPE. THE CONTRACTOR MUST USE SPECIAL CARE IN PLACING THIS PORTION OF THE BACKFILL SO AS TO AVOID SCRAPING OF THE EXTERIOR COATING, INJURING THE PIPE, AND DISTORTING OR MOVING THE PIPE WHEN COMPACTING THE SAME. ON TOP OF THE SAND BEDDING BACKFILL THE CONTRACTOR SHALL PLACE ANOTHER LAYER OF CRUSHED LIMESTONE SIX (6) INCHES THICK FOR THE ENTIRE WIDTH OF THE TRENCH. ON TOP OF THIS SIX (6) INCH LAYER OF COMPACTED LIMESTONE A SECOND FILLER OF HYDRATED LIME SHALL THEN BE APPLIED IN THE AMOUNT OF 3/4 OF A POUND PER SQUARE FOOT OF TRENCH. THE REMAINING BACKFILL SHALL BE MADE WITH LIMESTONE SCREENINGS AS ELSEWHERE SPECIFIED HEREIN, CAREFULLY PLACED AND COMPACTED BY TAMPING, OR ROLLING. ALL PRECAUTIONS SHALL BE TAKEN TO ELIMINATE FUTURE SETTLEMENT. THE TREATMENT OF THE TRENCH BOTTOM PREVIOUSLY DESCRIBED, MAY BE OMITTED WHERE THE CINDER DEPTH, MEASURED FROM THE TOP SURFACE DOES NOT EXCEED 2'-6".

PROVISIONS FOR PROTECTING THE WORK

THE CONTRACTOR SHALL FURNISH ALL THE NECESSARY EQUIPMENT, SHALL TAKE ALL NECESSARY PRECAUTIONS AND SHALL ASSUME THE ENTIRE COST OF HANDLING ANY SEWAGE, SEEPAGE, STORM SURFACE AND FLOOD FLOWS OR ICE, WHICH MAY BE ENCOUNTERED AT ANY TIME DURING THE CONSTRUCTION OF THE WORK. THE MANNER OF PROVIDING FOR THESE OCCURENCES SHALL MEET WITH THE APPROVAL OF THE ENGINEER. AFTER INSTALLATION, THE CONTRACTOR SHALL FURNISH AND MAINTAIN SATISFACTORY PROTECTION TO ALL EQUIPMENT WHETHER OF THIS OR OTHER CONTRACT AGAINST INJURY BY WEATHER, FLOODING OR BY DIRECT OR INCIDENTAL DAMAGE FROM HIS OWN OPERATIONS, LEAVING ALL WORK IN A PERFECT CONDITION AT THE COMPLETION OF THE CONTRACT. NO EXTRA PAYMENT WILL BE MADE FOR THIS WORK BUT THE ENTIRE COST OF THE SAME SHALL BE INCLUDED IN THE WORK TO BE DONE IN THIS CONTRACT.

DRAWINGS

(A) THE CONTRACTOR SHALL SUBMIT TO THE THE DIRECTOR FOR APPROVAL, DUPLICATE PRINTS OF ALL SHOP DRAWINGS AS DEVELOPED BY THE FABRICATOR, FOR CONCRETE PIPE, FITTINGS AND SPECIALS, AND MISCELLANEOUS DETAILS, SUCH AS VALVES, DRAIN FORGEINGS, PRECAST VALVES, CASTINGS, ETC. DRAWINGS SHALL INCLUDE DETAILS, LAYOUTS AND LAYING SCHEDULE FOR ALL PIECES FURNISHED REQUIRING DRAWING SUBMITTAL.

(B) ONE PRINT OF EACH OF THE DRAWINGS SUBMITTED WILL BE RETURNED WITH THE CRITICISMS OR APPROVAL OF THE DIRECTOR. IN CASE THE DRAWINGS ARE NOT APPROVED, THE CONTRACTOR SHALL AGAIN SEND FOR APPROVAL DUPLICATE REVISED PRINTS OF THE DRAWINGS TO TAKE CARE OF THE CRITICISMS NOTED, AND AFTER THE DRAWINGS HAVE BEEN FINALLY APPROVED, THE CONTRACTOR SHALL FURNISH TO THE DIRECTOR ONE (1) REPRODUCABLE TRACING ON CLOTH OR MYLAR, OF EACH DRAWING, NO WORK SHALL BE DONE IN THE SHOP UNTIL AFTER THE DRAWINGS HAVE BEEN FINALLY APPROVED. DRAWINGS SHALL BE ON A COMPOSITE SHEETS 24" X 36". NO SMALLER SHEETS WILL BE ACCEPTED. MYLAR FILM THICKNESS SHALL BE 4 MILS.

(C) THE APPROVAL OF THE DRAWINGS BY THE DIRECTOR SHALL NOT RELIEVE THE CONTRACTOR OF ANY OF HIS OBLIGATIONS IN CONNECTION WITH THIS CONTRACT.

TUNNELING

TUNNELING WILL NOT BE PERMITTED WITHOUT PERMISSION OF THE CITY. IN BACKFILLING TUNNELS, SAND SHALL BE USED AS FAR AS POSSIBILE AND BALANCE OF BACKFILLING MADE WITH CONCRETE, RAMMED IN PLACE.

LIST AND INVOICES

(A) THE CONTRACTOR SHALL FURNISH THE CITY WITH THE LIST IN DUPLICATE OF PIECES IN EACH SHIPMENT OF PIPE AND SPECIALS, GIVING THE SERIAL NUMBER AND DESIGNATION OF EACH PIPE AND SPECIAL SENT SENT AT THAT TIME.

(B) THE MATERIAL SHALL BE SHIPPED IN SUCH SECTIONS AS THE CITY MAY ORDER.

ITEM SPECIAL – DUCTILE IRON PIPE AND FITTINGS
WORK INCLUDED

(A) THE CONTRACTOR SHALL UNDER THIS ITEM, FURNISH ALL THE MATERIALS FOR AND SHALL PROPERLY CONSTRUCT AND CONNECT IN PLACE AT THE LOCATIONS SHOWN ON THE DRAWINGS OR AS DIRECTED, ALL DUCTILE IRON PIPE AND FITTINGS, INCLUDING ALL EXCAVATION WORK, THE CUTTING INTO AND REMOVAL OF EXISTING PIPE, BACKFILLING, SAND BACKFILL, AND REPAVING, ALL AS REQUIRED FOR THE PROPER COMPLETION OF THE WORK INCLUDED UNDER THIS CONTRACT. IN GENERAL THIS WORK SHALL INCLUDE THE FURNISHING, LAYING, CONNECTING, PAINTING AND TESTING OF PIPE AND FITTINGS, THE EXCAVATION, SHEETING AND SHORING, BACKFILLING, SAND BACKFILL, SEEDING AND SODDING, THE PERMANENT REPAVING, IF SO NOTED ON THE CONTRACT DRAWINGS, THE CUTTING INTO, REMOVAL AND STORAGE OF EXISTING MAINS AND THE FURNISHING OF ALL LABOR, MATERIALS, TOOLS AND EQUIPMENT TO COMPLETE THE WORK AS SPECIFIED, SHOWN OR ORDERED.

(B) IN MAKING THE CONNECTION TO EXISTING MAINS WHERE BRANCH SLEEVES CAN BE USED, THE CONTRACTOR SHALL SUPPLY THE SAME. THE DIVISION OF WATER WILL INSTALL THE BRANCH SLEEVE AND MAKE THE PRESSURE TAP IN ACCORDANCE WITH "WORK TO BE DONE BY THE CITY". IF THE INSTALLATION OF BRANCH SLEEVES AND VALVES CANNOT BE ACCOMPLISHED, THE CONTRACTOR WILL BE REQUIRED TO MAKE THE NECESSARY EXCAVATION, BACKFILL AND REPAVING.

DUCTILE-IRON PIPE AND FITTINGS

(A) ALL PIPE AND FITTINGS SHALL BE MANUFACTURED IN ALL RESPECTS IN ACCORDANCE WITH, AND SHALL MEET THE REQUIREMENTS OF THE LATEST "AMERICAN NATIONAL STANDARD" SPECIFICATIONS FOR DUCTILE-IRON PIPE CENTRIFUGALLY CAST IN METAL MOLDS OR SANDLINED MOLDS, AND DUCTILE IRON FITTINGS FOR WATER AND OTHER LIQUIDS, ADOPTED BY THE AMERICAN WATER WORKS ASSOCIATION; WHICH STANDARDS EXCEPT AS HEREIN MODIFIED ARE MADE A PART OF THESE SPECIFICATIONS. BOTLESS RESTRAINED PIPE AND FITTINGS SHALL BE FURNISHED.

(B) ALL PIPE AND FITTINGS SHALL BE CEMENT LINED AND OF THE SIZE AND THICKNESS AND PRESSURE CLASSES NOTED ON THE RESPECTIVE CONTRACT DRAWINGS OR DIRECTLY SPECIFIED. ALL FITTINGS ON PIPE SIZES UP TO AND INCLUDING 12 INCHES SHALL BE OF THE SHORT BODIED TYPE.

(C) THE CONTRACTOR SHALL FURNISH CENTRIFUGAL CAST DUCTILE-IRON CEMENT LINED PIPE. DUCTILE-IRON METAL SHALL HAVE A MINIMUM TENSILE STRENGTH OF 60,000 PSI, MINIMUM YIELD STRENGTH OF 42,000 PSI AND MINIMUM ELONGATION OF 10 PERCENT AND SHALL BE FOR THE THICKNESS CLASS NOTED ON THE CONTRACT DRAWINGS OR DIRECTLY SPECIFIED. PIPE MAY BE FURNISHED IN 18 OR 20 FOOT NOMINAL LAYING LENGTHS. THE CENTRIFUGALLY CAST DUCTILE SHALL CONFORM TO THE AMERICAN NATIONAL STANDARD ANSI A21.51-1976/AWWA C151-76 AND ALL SUBSEQUENT AMENDMENTS THERETO. PIPE ON STRAIGHT RUNS SHALL HAVE PUSH-ON SINGLE RUBBER-GASKET COMPRESSION JOINTS, ALL IN ACCORDANCE WITH AMERICAN NATIONAL STANDARD ANSI A21.11-80/AWWA C111-80 RUBBER GASKET JOINTS FOR DUCTILE-IRON PRESSURE PIPE AND FITTINGS.

(D) THE CONTRACTOR SHALL FURNISH DUCTILE-IRON CEMENT LINED FITTINGS. ALL DUCTILE-IRON FITTINGS ON PIPE SIZES 16" AND LARGER SHALL BE MANUFACTURED IN ACCORDANCE WITH AMERICAN NATIONAL STANDARD ANSI A21.10-82/AWWA C110-82 AND ALL SUBSEQUENT AMENDMENTS THERETO. METAL FOR FITTINGS SHALL CONFORM TO AMERICAN NATIONAL STANDARD ANSI A21.10-82. ALL FITTINGS SHALL BE OF THE SHORT BODIED TYPE IN ACCORDANCE WITH ANSI/AWWA C153/A21.53-B4 AND ALL SUBSEQUENT AMENDMENTS THERETO.

(E) STANDARD THICKNESS AND PIPE CLASS TABLES

THE THICKNESS OF THE CENTRIFUGALLY CAST DUCTILE IRON PIPE SHALL CONFORM TO THE FOLLOWING TABLE:

STANDARD THICKNESS OF CENTRIFUGALLY CAST, DUCTILE IRON PIPE

WORKING		STANDARD THICKNESS CLASSES				FITTINGS CLASS
SIZE	PRESSURE	52	53	54	56	PSI
12"	350	.37	.40	.43	.49	350

(F) GASKETS SHALL BE OF RUBBER OR OYHER EQUALLY EFFECTIVE PROTECTION AGAINST UNEVEN DISTORTION OF GASKET.

(G) WHERE FITTINGS ARE SHOWN WHICH ARE NOT COVERED BY THE ABOVE SPECIFICATIONS, THEY IN SUCH PARTICULARS AS ARE LACKING THEREON SHALL CONFORM TO THE DIMENSIONS AND OTHERWISE MEET THE SPECIFICATIONS FOR THE RESPECTIVE TYPE WHICH ARE CARRIED IN THE LATEST REVISIONS TO THE CURRENT EDITION OF THE DUCTILE IRON PIPE RESEARCH ASSOCIATION "HANDBOOK OF DUCTILE IRON PIPE" OR WHICH ARE OTHERWISE SHOWN ON THE CONTRACT DRAWINGS.

Stokes 0031 (4:021) SFN: 1833936

WATERWORK NOTES

DUCTILE–IRON PIPE AND FITTINGS (CONTINUED)

(H) WHEREVER CHANGES IN LINE AND GRADES OF THE MAIN AS SHOWN ON THE DRAWINGS ARE NOT STANDARD FITTING DEFLECTIONS, THE CONTRACTOR WILL BE PERMITTED TO SUBMIT DETAILS USING COMBINATIONS OF STANDARD FITTINGS AND SMALL DEFLECTIONS (NOT TO EXCEED THE MANUFACTURER'S MAXIMUM SUGGESTED JOINT OPENING) IN THE ADJOINING LENGTHS OF PIPE.

(I) CLOSURE PIECES SHALL BE ACCURATELY MEASURED AND CUT IN THE FIELD AND INSTALLED USING SOLID SHORT PATTERN SLEEVES HAVING MECHANICAL BELL JOINTS. MECHANICAL BELL JOINT SLEEVES SHALL BE RETAINED TYPE.

(J) TESTS, INSPECTION, REPORTS AND ANALYSES OF TESTS OF SAMPLES FOR ALL MATERIALS SHALL BE FURNISHED IN ACCORDANCE WITH THESE SPECIFICATIONS.

(K) BITUMASTIC COATING SHALL BE APPLIED ON THE EXTERIOR OF ALL DUCTILE IRON PIPE AND FITTINGS IN ACCORDANCE WITH AWWA SPECIFICATIONS.

(H) WHEREVER CHANGES IN LINE AND GRADES OF THE MAIN AS SHOWN ON THE DRAWINGS ARE NOT STANDARD FITTING DEFLECTIONS, THE CONTRACTOR WILL BE PERMITTED TO SUBMIT DETAILS USING COMBINATIONS OF STANDARD FITTINGS AND SMALL DEFLECTIONS (NOT TO EXCEED THE MANUFACTURER'S MAXIMUM SUGGESTED JOINT OPENING) IN THE ADJOINING LENGTHS OF PIPE.

(I) CLOSURE PIECES SHALL BE ACCURATELY MEASURED AND CUT IN THE FIELD AND INSTALLED USING SOLID SHORT PATTERN SLEEVES HAVING MECHANICAL BELL JOINTS. MECHANICAL BELL JOINT SLEEVES SHALL BE RETAINED TYPE.

(J) TESTS, INSPECTION, REPORTS AND ANALYSES OF TESTS OF SAMPLES FOR ALL MATERIALS SHALL BE FURNISHED IN ACCORDANCE WITH THESE SPECIFICATIONS.

(K) BITUMASTIC COATING SHALL BE APPLIED ON THE EXTERIOR OF ALL DUCTILE IRON PIPE AND FITTINGS IN ACCORDANCE WITH AWWA SPECIFICATIONS.

ITEM SPECIAL – DUCTILE IRON PIPE AND FITTINGS (CONTINUED)

CEMENT LINING

ALL PIPE FITTINGS SHALL BE GIVEN A CEMENT MORTAR LINING AT THE POINT OF MANUFACTURE. THE LINING SHALL CONFORM TO THE AMERICAN NATIONAL STANDARD A21.4–1980 (AWWA C104–80) AND ALL SUBSEQUENT AMENDMENTS THERETO.

MARKING

ALL PIPE AND FITTINGS SHALL BE SUITABLY MARKED TO DENOTE THE MANUFACTURER, CLASS, DATE, WEIGHT AND OTHER ELEMENTS OF IDENTIFICATION.

FACING AND DRILLING

ALL FLANGES SHALL BE CAST SOLID AND FACED ACCURATELY AT RIGHT ANGLES TO THE AXIS OF THE PIPE. ALL FLANGES SHALL BE COATED WITH WHITE LEAD IMMEDIATELY AFTER THEY HAVE BEEN FACED AND DRILLED. ALL FLANGED PIPE AND FITTINGS SHALL BE FACED AND DRILLED TO ANSI B16–1, 125LB. DRILLING, UNLESS SPECIAL DRILLING IS CALLED FOR. WHERE TAP OR STUD BOLTS ARE REQUIRED, FLANGES SHALL ALSO BE TAPPED.

LAYING

(A) PROPER AND SUITABLE TOOLS AND APPLIANCES FOR THE SAFE AND CONVENIENT HANDLING AND LAYING OF THE PIPE AND FITTINGS SHALL BE USED. GREAT CARE SHALL BE TAKEN TO PREVENT THE PIPE COATING AND FITTINGS FROM BEING DAMAGED PARTICULARLY ON THE INSIDE OF THE PIPES AND FITTINGS AND ANY SUCH DAMAGE SHALL BE REMEDIED AS DIRECTED. ALL PIPES AND FITTINGS SHALL BE CAREFULLY EXAMINED BY THE CONTRACTOR FOR DEFECTS JUST BEFORE LAYING AND NO PIPE OR FITTINGS SHALL BE LAID WHICH IS KNOWN TO BE DEFECTIVE.

(B) IF ANY DEFECTIVE PIPE IS DISCOVERED AFTER HAVING BEEN LAID, IT SHALL BE REMOVED AND REPLACED WITH A SOUND PIPE OR FITTING IN A SATISFACTORY MANNER, BY THE CONTRACTOR AT HIS OWN EXPENSE. ALL PIPES AND FITTINGS SHALL BE THOROUGHLY CLEANED BEFORE THEY ARE LAID, SHALL BE KEPT CLEAN UNTIL THEY ARE USED IN THE COMPLETED WORK, AND WHEN LAID, SHALL CONFORM TO THE LINES AND GRADES. OPEN ENDS OF PIPES SHALL BE KEPT PLUGGED WITH A BULKHEAD DURING CONSTRUCTION.

(C) PIPE LAID IN TRENCH SHALL BE LAID TO A FIRM AND EVEN BEARING FOR ITS FULL LENGTH. PRECAUTIONS SHALL BE TAKEN AGAINST FLOATING.

(D) IT IS THE INTENTION OF THESE SPECIFICATIONS TO SECURE FIRST CLASS WORKMANSHIP IN THE PLACING OF PIPE AND ACCESSORIES. IN SUCH DETAILS AS ARE NOT SPECIFICALLY MENTIONED HEREIN OR CALLED FOR ON THE DRAWINGS, THE CONTRACTOR WILL BE REQUIRED TO CONFORM WITH THE APPLICABLE SECTIONS OF THE LATEST AMERICAN NATIONAL STANDARD ANSI/AWWA C600–77, INSTALLATION OF GRAY AND DUCTILE CAST IRON WATER MAINS AND APPURTENANCES AS ADOPTED BY THE AMERICAN WATER WORKS ASSOCIATION.

CUTTING PIPE

WHENEVER THE PIPES REQUIRE CUTTING TO FIT INTO THE LINES, THE WORK SHALL BE DONE IN A SATISFACTORY MANNER SOA S TO LEAVE A SMOOTH END AT RIGHT ANGLES TO THE AXIS OF THE PIPE. WHEN A PIECE OF PIPE IS CUT TO FIT INTO THE LINE, NO PAYMENT WILL BE MADE FOR THE PORTION CUT OFF AND NOT USED IN THE LINE.

JOINTS

(A) FLANGED JOINTS

(1) FLANGED JOINTS SHALL BE INSTALLED AS SHOWN ON THE DRAWINGS. FLANGES SHALL BE EITHER CAST STEEL, FORGED OR ROLLED STEEL, OR PROPERLY WELDED AND MACHINED FABRICATED PLATES, WELDED TO PIPE WITH TWO CONTINUOUS WELDS. THEY SHALL BE FACED TRUE AND SMOOTH AT RIGHT ANGLES TO THE AXIS OF THE PIPE AND SHALL BE SPOT FACED ON THE BACK. DRILLING SHALL CONFORM TO ANSI B16.1, 125 LBS. EACH BLIND FLANGE SHALL BE CAST IRON AND HAVE BOSSES TAPPED AT TOP AND BOTTOM FOR TWO (2) INCH STANDARD PIPE AND FURNISHED WITH PLUGS.

(2) ALL BOLTS AND NUTS USED IN THE FINISHED WORK FOR FLANGES SHALL BE MADE OF SILICON BRONZE (ASTM B 98–74A, ALLOY A) OR STAINLESS STEEL (ASTM A 276–75, TYPE 302). THE ENDS OF ALL BOLTS MUST BE FINISHED TO STANDARD RADIUS IN ACCEPTABLE MANNER. ALL SCREW THREADS SHALL BE AMERICAN STANDARD COARSE THREAD (N.C.). STUD BOLTS DOUBLE END (ROD) SHALL BE USED TO MAKE THE FLANGED JOINTS ON PIPE. ALL DIMENSIONS TO BE ACCORDING TO AMERICAN STANDARD HEAVY. BOLTS AND NUTS SHALL BE DELIVERED TO THE FIELD FREE FROM GREASE, RUST AND DIRT AND SHALL BE PROPERLY PROTECTED FROM MOISTURE AND DIRT IN THE FIELD. GASKETS FOR FLANGED PIPE SHALL BE 5X MANILA ROPE PATTERN OR OTHER APPROVED TYPE.

(B) SLIP–ON JOINTS

ALL PIPE UNLESS OTHERWISE REQUIRED, SHOWN ON CONTRACT DRAWING, DIRECTLY SPECIFIED OR CONNECTED TO FITTINGS, VALVES AND HYDRANTS SHALL HAVE SOCKET BY PLAIN END RUBBER–GASKET PUSH–ON JOINTS WITH RADIALLY COMPRESSED LOCKED IN PLACE RUBBER RING GASKETS APPROVED BY THE COMMISSIONER OF WATER AND HEAT. SLIP–ON COMPRESSION JOINTS SHALL CONFORM TO THE REGULAR AND SPECIAL REQUIREMENT FOR PUSH–ON JOINTS IN AMERICAN NATIONAL STANDARD ANSI/AWWA C111/A21.11–80 FOR RUBBER GASKET JOINTS FOR DUCTILE–IRON AND GRAY–IRON PRESSURE PIPE AND FITTINGS.

(C) MECHANICAL JOINTS

ALL FITTINGS AND PIPE BELL ENDS CONNECTED TO FITTINGS, UNLESS OTHERWISE REQUIRED, SHOWN ON CONTRACT DRAWINGS, OR DIRECTLY SPECIFIED SHALL HAVE BELL OR PLAIN END JOINTS OF THE MECHANICAL BOLTED STUFFING–BOX TYPE WITH SEALING GASKET AND BOLTED DUCTILE–IRON FOLLOWER GLAND AND, WHERE REQUIRED OR CALLED FOR ON THE CONTRACT DRAWINGS, BE OF THE SPECIFIED RETAINED TYPE. BOLTS AND NUTS FOR MECHANICAL JOINTS SHALL BE CORROSION RESISTANT, HIGH STRENGTH, LOW ALLOY STEEL. MECHANICAL JOINTS SHALL CONFORM TO THE REGULAR AND SPECIAL REQUIREMENT THAT ALL GLANDS SHALL BE DUCTILE–IRON WITH JOINT DIMENSIONS AND TOLERANCES, BOLT HOLES AND SLOTS, GASKETS, RUBBER, QUALITY CONTROL, BOLTS AND NUTS AND MARKING BE IN CONFORMANCE WITH AMERICAN NATIONAL STANDARD ANSI/AWWA C111/A21.11–80 FOR RUBBER–GASKET JOINTS FOR DUCTILE–IRON AND GRAY–IRON PRESSURE PIPE AND FITTINGS. WHERE REQUIRED OR CALLED FOR ON THE CONTRACT DRAWINGS, MECHANICAL JOINTS SHALL BE RETAINED AS SPECIFIED IN PARAGRAPH E, "RETAINED MECHANICAL JOINTS". ALL MECHANICAL JOINTS SHALL BE POLYETHYLENE ENCASED AS SPECIFIED IN PARAGRAPH G, "POLYETHYLENE ENCASEMENTS OF JOINTS".

(D) VICTAULIC TYPE COUPLINGS

(1) WHERE SHOWN ON THE DRAWINGS OR WHERE REQUIRED, THE CONTRACTOR SHALL FURNISH AND INSTALL VICTAULIC TYPE COUPLINGS FOR CONNECTION OF DUCTILE IRON REDUCERS. TO VALVES, CONCRETE PIPE OR STEEL PIPE. STEEL PIPE ENDS SHALL BE FABRICATED AND GROOVED AS INDICATED ON THE DRAWINGS. THE COUPLINGS SHALL BE ADAPTED FOR INSTALLATION ON SHOULDERED END CAST IRON SPACERS, REDUCERS AND FITTINGS AND DESIGNED FOR NOT LESS THAN THE WORKING PRESSURE NOTED ON CONTRACT DRAWINGS. COUPLINGS SHALL BE COMPOSED OF MALLEABLE IRON HOUSINGS HELD TOGETHER WITH STEEL BOLTS HEAT TREATED AND "HOT–DIP" GALVANIZED AND WITH A CONTINUOUS HOLLOW, MOLDED RUBBER SEALING RING, OF SUCH TYPE THAT THE SEAL BECOMES TIGHT AS THE PRESSURE WITHIN THE PIPE INCREASES. THE JOINTS SHALL BE CONSTRUCTED AND INSTALLED AND BE EQUAL IN ALL RESPECTS TO THOSE MANUFACTURED BY THE VICTAULIC COMPANY OF AMERICA. MALLEABLE HOUSINGS SHALL CONFORM TO THE "STANDARD SPECIFICATIONS FOR MALLEABLE IRON CASTINGS ASTM DESIGNATION A 47–68". BOLTS SHALL BE MANUFACTURED BY THE COUPLING MANUFACTURER AND SHALL BE HEAT TREATED STEEL BOLTS HAVING 100,000 PSI. TENSILE STRENGTH. ALL BOLTS AND NUTS SHALL BE ZINC COATED BY THE "HOT–DIP" METHOD ACCORDING TO ASTM DESIGNATION A123.

(2) ALL METAL PARTS OF THE COUPLING SHALL BE COATED AT THE SHOP WITH ONE COAT OF BITUMINOUS PRIMER FURNISHED BY THE SAME MANUFACTURER WHO FURNISHES THE COATINGS AS SPECIFIED UNDER "COATING".

(E) RETAINED MECHANICAL JOINTS

ON ALL PIPE AND FITTINGS AT BENDS, TEES, CROSSES, SPECIAL FITTINGS, BETWEEN VERTICAL OFFSETS OR BENDS, ON HYDRANT BRANCHES, ON VALVES AND HYDRANT BASE ELBOWS UP TO AND INCLUDING 24–INCH SIZE WHERE SHOWN ON THE DRAWINGS OR WHERE REQUIRED BY "RESTRAINED DISTANCE", THE CONTRACTOR SHALL FURNISH AND INSTALL RETAINED TYPE MECHANICAL JOINTS.

PIPE AND FITTING BELL JOINT AND GASKETS SHALL BE FURNISHED AS SPECIFIED. GLANDS FOR RETAINED MECHANICAL JOINTS SHALL BE BOLTED TYPE OF DUCTILE–IRON MATERIAL CONFORMING TO AMERICAN NATIONAL STANDARD ANSI/AWWA C111/A21.11–80 FOR RUBBER–GASKET JOINTS FOR DUCTILE–IRON AND GRAY–IRON PRESSURE PIPE AND FITTINGS AND/OR CONFORMING WITH ASTM A 536–80 WITH THE ADDITIONAL REQUIREMENT THAT ALL SUCH GLANDS SHALL BE OF THE DUCTILE–IRON GRADE 60–42–10 MINIMUM REQUIREMENTS OF CENTRIFUGALLY CAST DUCTILE–IRON PIPE. RETAINED MECHANICAL JOINTS SHALL BE EQUIPPED WITH CUPPED END SQUARE HEAD CORROSION RESISTANT ALLOY STEEL OR COPPER–BEARING DUCTILE IRON SET SCREWS THREADED THROUGH TAPPED AND THREADED HOLES IN THE GLAND LIP. GLAND FLANGE SHALL BE THICKENED AND GLAND LIP SHALL BE EXTENDED TO PROVIDE FOR GLAND STRENGTH AND SET SCREW SIZE. NO SPLIT RETAINER GLANDS SHALL BE USED. LONGER BOLTS FOR JOINT ASSEMBLY SHALL BE FURNISHED WITH RETAINER GLANDS. SET SCREWS SHALL BE MINIMUM FIVE–EIGHTS INCH (5/8") SIZE. NUMBER OF PERPENDICULAR SET SCREWS PER RETAINED JOINT SHALL BE: 4 SIZE. NUMBER OF PERPENDICULAR SET SCREWS PER RETAINED JOINT SHALL BE: 4 FOR 4" PIPE, 6 FOR 6" PIPE, MINIMUM OF 8 FOR 8" PIPE, MINIMUM OF 12 FOR 10" PIPE, 16 FOR 12" PIPE, 24 FOR 16" PIPE, 28 FOR 20" PIPE AND 32 FOR 24" PIPE. WEDGE ACTION TYPE RETAINED MECHANICAL JOINTS HAVING TWIST–OFF NUTS MAY BE USED IF APPROVED BY THE COMMISSIONER OF WATER AND HEAT AS TO SIZE, NUMBER AND BOLT SIZE. WHERE JOINT DEFLECTION IS NECESSARY FOR ALIGNMENT SUCH DEFLECTION SHALL BE LIMITED TO 3 DEGREES. SET SCREWS SHALL BE TIGHTENED AFTER JOINT IS MADE TO 75 FOOT–POUNDS TORQUE. SET–SCREW TIGHTENING SHALL BE DONE AFTER THE JOINT BOLTS HAVE BEEN TIGHTENED. SET SCREWS SHALL ALL BE MADE FINGER–TIGHT AND TIGHTENED TO MAXIMUM TORQUE BY ALTERNATING TO OPPOSITE SIDES. ALL RETAINED MECHANICAL JOINTS RETAINER GLANDS SHALL BE OF A DESIGN APPROVED BY THE COMMISSIONER OF WATER AND HEAT. ALL RETAINED JOINTS SHALL BE RATED FOR 250 PSI PRESSURE. ALL RETAINED JOINTS SHALL BE POLYETHYLENE ENCASED AS SPECIFIED IN PARAGRAPH G.

(F) BOLTLESS RESTRAINED SLIP–ON JOINTS

ON PIPE AND FITTINGS ALL RESTRAINT SHALL BE OF THE BOLTLESS RESTRAINED SLIP–ON JOINT TYPE AND SHALL EXTEND FOR A MINIMUM DISTANCE OF ONE (1) EIGHTEEN FOOT (18') LENGTH OF PIPE OUT OF BOTH ENDS OF FITTINGS. VALVES WITHIN THE "RESTRAINED DISTANCES" SHALL BE OF THE TYPE INDICATED ON THE CONTRACT DRAWINGS. BOLTLESS RESTRAINED SLIP–ON JOINTS SHALL BE OF A DESIGN CONSISTING OF A SHOP WELDED RETAINER RING OR SEGMENT ON THE SPIGOT END OF THE PIPE THAT WHEN THE JOINT IS FULLY ASSEMBLED "LOCKS" INTO THE BELL OF THE ADJACENT PIPE OR FITTING PROVIDING A POSITIVE RESTRAINED JOINT. NO FIELD WELDED RESTRAINED JOINTS ARE PERMITTED EXCEPT ON LENGTHS OF PIPE LESS THAN NOMINAL LENGTH NEED TO CLOSE THE LINE. BOLTLESS RESTRAINED JOINTS SHALL BE OF A DESIGN THAT PROVIDES RESTRAINED ACTION BETWEEN THE SPIGOT AND BELL OF THE PIPE OR FITTING INDEPENDENT OF THE GASKET.

(G) POLYETHYLENE ENCASEMENT

ALL MECHANICAL JOINTS, ALL RETAINED MECHANICAL JOINTS AND ALL PIPE AND FITTING WHERE SHOWN ON THE DRAWING OR WHERE REQUIRED SHALL BE POLYETHYLENE ENCASED. POLETHYLENE ENCASEMENT FOR MECHANICAL JOINTS, RETAINED MECHANICAL JOINTS OR ANY JOINT REQUIRING BOLTS SHALL BE GENERALLY IN ACCORDANCE WITH AMERICAN NATIONAL STANDARD ANSI/AWWA C105/A21.582 FOR POLYETHYLENE ENCASEMENT FOR DUCTILE–IRON PIPING FOR WATER AND OTHER LIQUIDS. MECHANICAL JOINTS, RETAINED MECHANICAL JOINTS AND ALL BOLTED JOINTS SHALL HAVE DOUBLE POLYETHYLENE ENCASEMENT OF CLASS "C" (BLACK) FILM, METHOD "C" DOUBLING SHEET AND PROVIDING ONE FOOT (1') MINIMUM OVERLAP ON PIPE OR FITTING ON BOTH SIDES OF JOINT. ALL PIPE AND FITTINGS WHERE SHOWN ON THE DRAWINGS OR WHERE OTHERWISE REQUIRED TO BE POLYETHYLENE ENCASED SHALL BE ENCASED USING CLASS "C" FILM, METHOD "B". POLYETHYLENE ENCASEMENT SHALL BE SECURELY TAPED SNUG AROUND PIPE AND FITTINGS.

(H) ALL BOLTS AND NUTS ON ALL MECHANICAL JOINTS AND RETAINED MECHANICAL JOINTS SHALL HAVE FIELD APPLIED THREE (3) COAT OF BITUMASTIC COATING PRIOR TO POLYETHYLENE ENCASEMENT.

PAINTING

AFTER ERECTION AND BEFORE POLYETHYLENE ENCASEMENT, ALL EXPOSED OR DAMAGED COATING AND ALL BOLTS FOR MECHANICAL JOINTS, RETAINED MECHANICAL JOINTS, FLANGES AND VICTAULIC OR COMPRESSION TYPE BOLTED SLEEVED COUPLINGS SHALL BE CLEANED AND PAINTED WITH THREE (3) FIELD COATS OF KOPPERS BITUMASTIC SUPER TANK SOLUTION OR EQUIVALENT.

DRAWINGS

(A) THE CONTRACTOR SHALL SUBMIT TO THE DIRECTOR FOR APPROVAL DUPLICATE PRINTS OF ALL SHOP DRAWINGS FOR PIPE AND FITTINGS AND MISCELLANEOUS OR SPECIAL DETAILS OF PIPE AND FITTING JOINTS WHICH ARE NOT STANDARD CONSTRUCTION OR FULLY DETAILED IN THE REGULAR CATALOUGE OF THE COMPANY FURNISHING THE PIPE, FITTINGS AND SPECIALS. NO WORK SHALL BE DONE IN THE SHOP UNTIL AFTER THE DRAWINGS HAVE BEEN APPROVED.

(B) THE APPROVAL OF THE DRAWINGS BY THE DIRECTOR SHALL NOR RELIEVE THE CONTRACTOR OF ANY OF HIS OBLIGATIONS IN CONNECTION WITH THIS CONTRACT.

Stokes 0031 (4:021) SFN: 1833936

WATERWORK NOTES

ITEM SPECIAL – EXTRA STRONG WELDED GALVANIZED STEEL PIPE ASTM A–53, GRADE B

(A) GALVANIZED STEEL PIPE SHALL BE 12.75" O.D. X 0.50" WALL ASTM A–53 GRADE B, HAVING A MINIMUM WORKING PRESSURE OF 350 PSI.

(B) THE INTERIOR OF ALL STEEL PIPE SHALL BE TOTALLY PRIMED AND COATED WITH WATER RESISTANT WHITEWASH FOR A DISTANCE OF THREE (3) FEET FROM EACH END.

DRAWINGS – EXTRA STRONG WELDED GALVANIZED STEEL PIPE ASTM A–53, GRADE B AND APPURTENANCES

(A) THE CONTRACTOR SHALL SUBMIT TO THE CITY THROUGH THE ENGINEER FOR APPROVAL A MINIMUM OF SIX (6) SETS OF PRINTS OF ALL SHOP DRAWINGS GENERATED BY THE PIPE OR STRUCTURAL FABRICATOR OF ALL PIPE, FITTINGS AND MISCELLANEOUS OR SPECIAL DETAILS OF PIPE AND FITTING JOINTS INCLUDING LINE AND ASSEMBLY LAYOUT, FLANGE DETAILS, VICTAULIC GROOVING, VICTAULIC COUPLINGS, EXPANSION JOINTS, WELDING DETAILS, FACTORY APPLIED INSULATION, FIELD APPLIED INSULATION, JACKET, SLEEVE PACKING DETAILS, PIPE SUPPORT DETAILS INCLUDING CLAMP, SHIMS AND "LUBRITE" PLATE, AND ANY OTHER PIPE APPURTENANCES. THE LINE AND ASSEMBLY LAYOUT SHALL INCLUDE ALL PIPE AND FITTING DIMENSIONS, LOCATION OF ALL PIPE JOINT AND TYPE, ALL PIPE SUPPORTS, ELEVATIONS OF PIPE AT SUPPORTS, EXPANSION JOINTS AND LOCATION OF ANY OTHER PIPE APPURTENANCES. NO WORK SHALL BE DONE IN THE SHOP UNTIL AFTER THE DRAWINGS HAVE BEEN APPROVED.

(B) THE APPROVAL OF THE DRAWINGS BY THE CITY SHALL NOT RELIEVE THE CONTRACTOR OF ANY OF HIS OBLIGATIONS IN CONNECTION WITH THIS CONTRACT.

JOINTS

(A) FLANGED JOINTS:
FLANGED JOINTS SHALL BE INSTALLED AS SHOWN ON THE DRAWINGS. FLANGES SHALL STRADDLE VERTICAL AND HORIZONTAL CENTERLINES. FLANGES FOR 12" AND 16" STEEL PIPE SHALL BE CLASS "D" OR WELDED NECK CLASS "D" FLANGES. FLANGES FOR 24" STEEL PIPE SHALL BE CLASS "E" OR WELDED NECK CLASS "E" FLANGES. FLANGES SHALL BE OF EITHER CAST STEEL, FORGED OR ROLLED STEEL, OR PROPERLY WELDED AND MACHINED FABRICATED STEEL PLATES, WELDED TO PIPE WITH TWO (2) CONTINUOUS WELDS. THEY SHALL HAVE PLAIN FACES AND SHALL BE FACED TRUE AND SMOOTH AT RIGHT ANGLES TO THE AXIS OF THE PIPE AND SHALL BE SPOT FACED ON THE BACK. DRILLING SHALL CONFORM TO "AMERICAN 1928 STANDARD" DRILLING 150 POUND TEMPLATE. BLIND FLANGES, WHERE REQUIRED, SHALL BE RIBBED STEEL OR SHALL BE DISHED CAST IRON HAVING BOSSES TAPPED AT TOP AND BOTTOM FOR TWO (2) INCH STANDARD PIPE AND FURNISHED WITH MALLEABLE IRON PLUGS. ALL BOLTS AND NUTS FOR FLANGES AND OTHER TYPES OF BOLTING SHALL BE MADE OF STAINLESS STEEL: ASTM A 276–89A, TYPE 304, "SPECIFICATION FOR STAINLESS AND HEAT–RESISTING SHEET BARS AND SHAPES."

(B) EXPANSION JOINT ASSEMBLY:
THE CONTRACTOR SHALL PROVIDE SHOP DRAWINGS TO THE CITY THROUGH THE ENGINEER FOR APPROVAL OF THE EXPANSION JOINT ASSEMBLY.
THE EXPANSION JOINT ASSEMBLY SHALL BE, "DRESSER STYLE 63, TYPE 1" SLIP TYPE, OR APPROVED EQUAL, WITH MINIMUM 1/2" THICK BODY AND SLIP, WITH AN 8–IN, TRAVERSE. THE EXPANSION JOINT ASSEMBLY SHALL INCLUDE ALL MATERIALS, BOLTS, NUTS AND WASHERS, WELDED NECK FLANGES A.S.A. 150# AND GASKETS. ALL BOLTS AND NUTS SHALL BE MADE OF STAINLESS STEEL: ASTM A276–89A, TYPE 304, "SPECIFICATION FOR STAINLESS AND HEAT–RESISTING SHEET BARS AND SHAPES." NO FIELD WELDING OF GALVANIZED STEEL PIPE WILL BE PERMITTED. THE EXPANSION JOINT SHALL BE GALVANIZED EXCEPT SLIP PIPE. THE EXPANSION JOINT SHALL HAVE FIELD APPLIED INSULATION AS PER DETAILS ON THE CONTRACT DRAWINGS.

(C) VICTAULIC TYPE COUPLINGS:
THE CONTRACTOR SHALL PROVIDE SHOP DRAWINGS TO THE CITY THROUGH THE ENGINEER FOR APPROVAL OF THE VICTAULIC COUPLING.
(1) WHERE SHOWN ON THE DRAWINGS OR WHERE REQUIRED, THE CONTRACTOR SHALL FURNISH AND INSTALL VICTAULIC STYLE 77 TYPE COUPLINGS FOR CONNECTION OF THE STEEL PIPE ENDS. STEEL PIPE ENDS SHALL BE FABRICATED AND GROOVED AS INDICATED ON THE DRAWINGS. THE COUPLINGS SHALL BE COMPOSED OF MALLEABLE IRON HOUSINGS HELD TOGETHER WITH STEEL BOLTS HEAT TREATED AND "HOT–DIP" GALVANIZED ACCORDING TO ASTM DESIGNATION A123–89, "SPECIFICATION FOR ZINC (HOT–DIPPED GALVANIZED) COATINGS ON IRON AND STEEL PRODUCTS," AND WITH A CONTINUOUS, HOLLOW, MOLDED RUBBER SEALING RING OF SUCH TYPE THAT THE SEAL BECOMES TIGHT AS THE PRESSURE WITHIN THE PIPE INCREASES. THE JOINTS SHALL BE CONSTRUCTED AND INSTALLED AND BE EQUAL IN ALL RESPECTS TO THOSE MANUFACTURED BY THE "VICTAULIC COMPANY OF AMERICA". MALLEABLE HOUSINGS SHALL CONFORM TO ASTM DESIGNATION A 47–84, "SPECIFICATION FOR FERRITIC MALLEABLE IRON CASTINGS;" OR ASTM DESIGNATION A 536, LATEST REVISION. BOLTS AND NUTS SHALL BE MANUFACTURED BY THE COUPLING MANUFACTURER AND SHALL COMPLY IN MATERIAL WITH THE REQUIREMENTS OF ASTM A 183–83, OR LATEST REVISION, STANDARD SPECIFICATION FOR "CARBON STEEL TRACK BOLTS AND NUTS."
(2) ALL METAL PARTS OF THE COUPLINGS SHALL BE COATED AT THE SHOP WITH ONE COAT OF BITUMINOUS PRIMER FURNISHED BY THE SAME MANUFACTURER WHO FURNISHES THE COATINGS AS SPECIFIED UNDER "COATINGS."

PIPE SUPPORT ASSEMBLIES

PIPE SUPPORT ASSEMBLIES SHALL BE FABRICATED AS DETAILED ON THE PLANS ANS SHALL BE COMPLETE IN ALL RESPECTS INCLUDING ALL MATERIALS, CADMIUM PLATED SHOULDER AND CLAMP BOLTS AND NUTS. THE SUPPORT ASSEMBLY CLAMP, SEAT PLATE ("LUBRITE" PLATE) AND SHIMS SHALL ALL BE HOT–DIPPED GALVANIZED AFTER FABRICATION PER ASTM A–123, ~~LATEST REVISION~~ THEREOF. NO FIELD WELDING OF GALVANIZED STEEL PIPE ~~WILL BE~~ PERMITTED. THERE SHALL BE A ~~MINIMUM~~ OF TWO (2) PIPE SUPPORTS FOR EACH PIPE LENGTH.

INSULATION

INSULATION SHALL BE MINIMUM THREE AND ONE–HALF (3–1/2") FOR 12.75" O.D. STEEL PIPE AND MINIMUM THREE INCHES (3") FOR 16" O.D. STEEL PIPE OF A DENSE POLYURETHANE FOAM FACTORY APPLIED TO COMPLETELY FILL THE SPACE BETWEEN THE PIPE AND THE OUTER WEATHER–PROOF JACKET. THE OUTER JACKET SHALL BE SECURED WITH MINIMUM 1/2" WIDE STAINLESS STEEL BANDS AT A MINIMUM OF 24" ON CENTER. IN LIEU OF THE GALVANIZED STEEL JACKET A FACTORY APPLIED POLYURETHANE FOAM INSULATION HAVING A FIBERGLASS REINFORCED POLYESTER OUTER JACKET OF THE DIMENSIONS EQUAL TO THAT SHOWN ON THE PLANS FOR THE GALVANIZED STEEL JACKET MAY BE FURNISHED.

IN LIEU OF THE EXTERIOR COATING INDICATED ABOVE A MINIMUM THREE (3) INCHES OF A FACTORY APPLIED POLYURETHANE FOAM INSULATION HAVING A FIBERGLASS REINFORCED POLYESTER OUTER JACKET MAY BE FURNISHED.

PIPE JOINTS, INCLUDING EXPANSION JOINTS AND SUPPORT AREAS, AND PIPE BETWEEN THE BACKWALLS OF THE BRIDGE ABUTMENTS SHALL BE FIELD INSULATED WITH FIBERGLASS OF POLYURETHANE FOAM AND JACKETED WITH GALVANIZED STEEL BANDED OVER ADJACENT JACKET. ALL FIELD APPLIED INSULATION SHALL BE INSTALLED TO FULLY FILL ANY VOIDS. FIELD PLACED INSULATION AND JACKET SHALL BE REMOVABLE IN ORDER TO PERFORM MAINTENANCE OR MAKE ADJUSTMENTS TO THE PACKING GLAND OF THE EXPANSION JOINT(S).

BURIED PIPE BEYOND THE BACKWALLS OF THE BRIDGE ABUTMENTS HAVING LESS THAN FOUR AND ONE–HALF (4–1/2') FEET OF COVER SHALL BE INSULATED WITH A MINIMUM OF A ONE (1) FOOT INSULATION ENVELOPE EQUAL TO "WITCOLITE" OR "GILSULATE 500XR."

THE VOID BETWEEN THE SLEEVE AND THE STEEL WATERMAIN THROUGH EACH BRIDGE ABUTMENT WALL SHALL BE FILLED WITH JUTE PACKING AND SEALED AT BOTH ENDS WITH THREE (3") INCHES OF NON–SHRINKING GROUT AS SHOWN IN THE "SLEEVE PACKING DETAIL" ON THE PLANS.

MEASUREMENT

THE NUMBER OF LINEAR FEET OF STEEL PIPE TO BE PAID FOR SHALL BE THE ACTUAL NUMBER OF LINEAR FEET FURNISHED AND PLACED IN ACCORDANCE WITH THESE SOECIFICATIONS AS MEASURED ALONG THE AXIS OF THE PIPING.

PAYMENT

(A) THE FOOTAGE MEASURED AS PROVIDED ABOVE SHALL BE PAID FOR AT THE CONTRACT PRICE BID PER LINEAR FOOT FOR "ITEM SPECIAL–WATERMAIN EXTRA STRONG WELDED GALVANIZED STEEL PIPE ASTM A–53, GRADE B" CLASSIFIED AS TO SIZE AND TYPE, WHICH PRICE AND PAYMENT SHALL CONSTITUTE FULL COMPENSATION FOR FURNISHING, HAULING, PLACING, CUTTING INTO AND CONNECTING THE PIPE, INCLUDING ALL EXPANSION JOINTS, COUPLINGS, PIPE INSULATION, INSTALLING SUPPORT ASSEMBLIES, AND OTHER PIPE APPURTENANCE, FURNISHING AND COMPLETING THE SLEEVE PACKING DETAIL, INCLUDING THE SEAL, AND FOR ALL LABOR, EQUIPMENT, TOOLS AND INCIDENTALS NECESSARY TO COMPLETE THIS ITEM EXCEPT FOR THE ITEMS SPECIFICALLY LISTED AS SEPERATE PAY ITEMS.

(B) THE CONTRACTOR WILL BE ASSESSED A CWD LABOR CHARGE FOR THE CHLORINATION OR THE FLUSHING, TESTING AND SAMPLING OF THE NEWLY LAID WATERMAIN BY THE CITY OF CLEVELAND, DIVISION OF WATER, PAYMENT OF THE CWD LABOR CHARGE FOR CHLORINATION OR THE FLUSHING, TESTING AND SAMPLING SHALL BE MADE BY THE CONTRACTOR TO THE PERMITS AND SALES SECTION OF THE DIVISION OF WATER BEFORE ANY WATER WORK IS PERFORMED.

ITEM SPECIAL– MISCELLANEOUS METAL WORK

WORK INCLUDED

(A) THE CONTRACTOR SHALL FURNISH AND INSTALL ALL MISCELLANEOUS METAL WORK WHICH IS REQUIRED FOR THE PROPER COMPLETION OF THE WORK INCLUDED UNDER THIS CONTRACT AND IS NOT SPECIFICALLY INCLUDED UNDER THE OTHER ITEMS OR THESE SPECIFICATIONS.

(B) IN GENERAL, THE WORK SHALL INCLUDE THE REPLACEMENT OF ANY VALVE BOXES, COVERS, MANHOLE RINGS AND COVERS, WATER SERVICE STOP BOXES, BRONZE BOLTS, MANHOLE STEPS, EXTENSION STEMS AND BRACE STRUCTURAL MEMBERS AND OTHER SIMILAR ITEMS DETERMINED BY THE ENGINEER AS BEING UNSUITABLE.

MATERIALS

ALL CASTINGS SHALL CONFORM TO THE REQUIREMENTS OF ITEM 604 OF THE OHIO DEPARTMENT OF TRANSPORTATION CONSTRUCTION AND MATERIALS SPECIFICATIONS. ALL STRUCTURAL STEEL SHALL MEET THE REQUIREMENTS OF THE ASTM SPECIFICATIONS A 36. ALL BRONZE BOLTS AND NUTS SHALL CONFORM TO THE U. S. STANDARD SIZES, AND SHALL BE CLEAN CUT AND HAVE WELL FITTED THREADS. ALL BRONZE BOLTS AND NUTS SHALL BE TOBIN OR MANGANESE BRONZE, OR OF SIMILAR APPROVED MATERIAL.

ALUMINUM, EXCEPT AS OTHERWISE REQUIRED, SHALL BE ALUMINUM ALLOY EQUIVALENT TO SPECIFICATION 6063; RIVETS AND SCREWS SHALL BE 2017 ALLOY; ALUMINUM PLATE AND STRUCTURAL SHAPES SHALL BE 2017 ALLOY; ALUMINUM PLATE AND STRUCTURAL SHAPES SHALL BE 6061–T6 AND EXTRUDED SHAPES SHALL BE 6063–T5; ALL AS MANUFACTURED BY THE ALUMINUM COMPANY OF AMERICA, OR EQUAL.

BRASS SHALL BE OF A COMMERCIAL GRADE CONFORMING TO THE "STANDARD SPECIFICATIONS FOR BRASS PLATE, SHEET, STRIP AND ROLLED BAR", ASTM DESIGNATION B 36–71, ALLOY NO. 3.

COPPER–SILICON ALLOY OR "EVERDUR" SHALL CONFORM TO THE "STANDARD SPECIFICATIONS FOR COPPER–SILICON ALLOT PLATE, SHEET, STRIP AND ROLLED BAR FOR GENERAL PURPOSES", ASTM DESIGNATION B97–70, TYPE B.

STAINLESS STEEL RODS AND FASTENERS SHALL CONFORM TO THE REQUIREMENTS OF "SPECIFICATIONS FOR HOT ROLLED AND COLD–FINISHED STAINLESS AND HEAT–RESISTANT BARS". ~~ASTM DESIGNATION A~~ 276–72, TYPE 304. ALL WROUGHT IRON SHALL MEET THE REQUIREMENTS OF THE "SPECIFICATIONS FOR ROLLED WROUGHT IRON SHAPES AND BARS", ASTM DESIGNATION A 207–68, OR THE "SPECIFICATIONS FOR WROUGHT IRON PLATES", ASTM DESIGNATION A42–66.

CAST IRON VALVE BOXES AND COVERS SHALL BE GRAY IRON CASTINGS, IN WHICH APPEARANCE AND DIMENSION TOLERANCES ARE PRIMARY CONSIDERATIONS AND STRENGTH IS NOT A PRIMARY OR MAJOR CONSIDERATION. VALVE BOXES AND COVERS SHALL BE ASTM DESIGNATION A–48 WITH NO SPECIFIC REQUIREMENT AS TO CLASS. CHEMICAL COMPOSITION SHALL NOT BE CONSIDERED, BUT THE MATERIAL SHALL BE OF GOOD QUALITY AND OF SUCH CHARACTER AS SHALL MAKE THE METAL OF THE

CASTINGS STRONG, TOUGH AND OF EVEN GRAIN. THE METAL SHALL BE MADE WITHOUT ANY ADMIXTURE OF CINDER IRON OR OTHER INFERIOR METAL.

WORKMANSHIP AND FINISH SHALL CONFORM SUBSTANTIALLY TO THE DIMENSIONS ON THE CONTRACT DRAWINGS OR FURNISHED DRAWINGS. THE CASTINGS SHALL BE FREE FROM INJURIOUS DEFECTS, CRACKS, GAS HOLES, FLAWS, AND EXCESSIVE SHRINKAGE. ADDITIONAL INSPECTION MAY BE MADE AT THE PROJECT OR WORK SITE. INSPECTION SHALL BE VISUAL INSPECTION FOR APPEARANCE AND SURFACE SMOOTHNESS IN COMPARISON WITH SAMPLES ACCEPTED AS STANDARD.

SAMPLE CASTINGS FROM EACH PATTERN, WHEN REQUIRED BY THE ENGINEER, SHALL BE SUBMITTED BY THE MANUFACTURER FOR THE PURPOSE OF ESTABLISHING STANDARDS OF APPEARANCE AND DIMENSIONAL TOLERANCES. THE MANUFACTURER SHALL CERTIFY THAT HIS PRODUCT CONFORMS TO THESE SPECIFICATIONS. EACH CERTIFICATION SO FURNISHED SHALL BE SIGNED BY AN AUTHORIZED AGENT OF THE MANUFACTURER.

CLEANING AND TESTING

ALL CASTINGS SHALL BE THOROUGHLY CLEANED AND SUBJECTED TO A CAREFUL HAMMER TEST.

NO CASTINGS SHALL BE COATED UNLESS CLEAN AND FREE FROM RUST, AND APPROVED IN THESE RESPECTS BY THE ENGINEER OR HIS AUTHORIZED INSPECTOR IMMEDIATELY BEFORE BEING DIPPED.

COATING

EACH COATING SHALL BE SPRAYED OR BRUSHED INSIDE AND OUT WITH ONE COAT OF ASPHALTIC COMPOUND VARNISH. THE VARNISH SHALL BE MADE OF HIGH GRADE ASPHALT FLUXED AND BLENDED WITH PROPERLY TREATED DRYING OILS AND THINNED TO A PROPER CONSISTENCY WITH A VOLATILE SOLVENT. THE VARNISH SHALL BE MADE TO COMPLY WITH FEDERAL SPECIFICATION 77–V–51A OR JOINT ARMY–NAVY SPECIFICATION JAN–P–450. OTHER METHODS OF COATING AND TYPES OF COATING MATERIAL SHALL BE SUBJECT TO THE APPROVAL OF THE ENGINEER. IN ADDITION TO THE SHOP COAT, THE CASTINGS SHALL RECEIVE TWO (2) COATS OF APPROVED PAINT.

INSPECTION

THE ENGINEER OR HIS AUTHORIZED REPRESENTATIVE SHALL HAVE THE RIGHT TO INSPECT THE MATERIAL AND WORK DONE, AS THE INTERESTS OF THE CITY OR STATE MAY REQUIRE. SUCH INSPECTION SHALL NOT RELIEVE THE CONTRACTOR FROM ANY OBLIGATION TO PERFORM SAID WORK STRICTLY IN ACCORDANCE WITH THE SPECIFICATIONS, AND ANY MODIFICATION THEREOF, AS HEREIN PROVIDED, AND WORK NOT SO CONSTRUCTED SHALL BE REMOVED AND MADE GOOD BY THE CONTRACTOR AT HIS OWN EXPENSE. ALL MANHOLE RINGS AND COVERS MUST BE SOUND AND SHALL CONFORM TO THESE SPECIFICATIONS, AND ANY DEFECTIVE CASTINGS WHICH MAY HAVE PASSED THE INSPECTOR AT THE WORKS, OR ELSEWHERE, SHALL BE AT ALL TIMES LIABLE TO REJECTION WHEN DISCOVERED, UNTIL THE DATE OF FINAL PAYMENT UNDER THIS CONTRACT.

STEPS AND LADDERS

DUCTILE IRON STEPS AND LADDERS OF THE SIZE AND SHAPE SHOWN ON THE CONTRACT DRAWINGS SHALL BE BUILT INTO THE BRICK AND CONCRETE MASONRY OF THE MANHOLES AS INDICATED ON THE DRAWINGS.
RIMS AND COVERS

(A) ALL CAST IRON MANHOLE RIMS AND COVERS OF THE FORMS, DIMENSIONS AND DETAIL SHOWN ON THE CONTRACT DRAWINGS SHALL BE FURNISHED AND INSTALLED AS DIRECTED.

(B) THE RIMS SHALL BE PROPERLY SET IN PLACE IN A FULL BED OF MORTAR OF POURED MONOLITHIC IN THE MASONRY, AT SUCH ELEVATION AS TO MAKE THE TOP OF THE RIM CONFORM TO THE FINISHED SURFACES OF THE STRUCTURES OR THE FINISHED GRADE AS ESTABLISHED BY THE ENGINEER.

DETAILED DRAWINGS

COMPLETE DETAILED DRAWINGS OF MISCELLANEOUS METAL WORK SHALL BE SUBMITTED TO THE ENGINEER FOR APPROVAL, PRIOR TO THE MANUFACTURE OF ANY WORK TO BE FURNISHED UNDER THIS ITEM IN ACCORDANCE WITH THESE SPECIFICATIONS.

PAINTING

ALL MISCELLANEOUS METAL WORK NOT GALVANIZED SHALL BE THOROUGHLY CLEANED AND GIVEN THREE (3) COATS OF COAL TAR PITCH, USING INTERTOL 50 OR BITUMASTIC 50, OR APPROVED EQUAL.

MEASUREMENT

THE MISCELLANEOUS METAL WORK SHALL BE THE METAL WORK ACTUALLY FURNISHED AND PLACED IN ACCORDANCE WITH THESE SPECIFICATIONS AND THE DETAILED DRAWINGS APPROVED BY THE DIRECTOR. IN THE COMPUTING OF WEIGHTS, IF NOT DETERMINED BY WEIGHING, ONE (1) CUBIC FOOT OF CAST IRON SHALL BE ASSUMED TO WEIGH FOUR HUNDRED AND FIFTY (450) POUNDS, AND ONE (1) CUBIC FOOT OF STEEL SHALL BE ASSUMED TO WEIGH FOUR HUNDRED AND NINETY (490) POUNDS. THE WEIGHT OF CAST IRON SHALL BE USED FOR CAST IRON VALVE BOXES AND COVERS AND ANY CAST IRON SECTIONS OF VALVE BOXES AND COVERS. WHERE PLASTIC PIPE IS USED AS THE EXTENSION, THE PIPE SHALL BE INCLUDED IN THE CAST IRON WEIGHT WITH NO SEPARATE ALLOWANCE FOR LENGTH OR WEIGHT.

PAYMENT

THE UNIT PRICE STIPULATED PER POUND FOR MISCELLANEOUS METAL WORK SHALL INCLUDE THE FURNISHING, ERECTING, MACHINING, FITTING, ADJUSTING, BOLTING, CLEANING AND PAINTING OF ALL MISCELLANEOUS METAL WORK, AND THE FURNISHING OF ALL LABOR, MATERIALS, TOOLS AND APPLIANCES NECESSARY TO COMPLETE THE WORK AS SPECIFIED OR AS SHOWN. THE FOLLOWING ESTIMATED QUANTITIES ARE INCLUDED IN THE GENERAL SUMMARY FOR THIS WORK:

ITEM SPECIAL–MISCELLANEOUS METAL WORK 3000 LBS.

Stokes 0031 (4:021) SFN: 1833936

WATERWORK NOTES

ITEM SPECIAL – MAINTENANCE OF WATER SERVICE

(A) THE CONTRACTOR SHALL PROVIDE, INSTALL, MAINTAIN AND REMOVE ALL TEMPORARY WATER MAINS AND TEMPORARY SERVICE CONNECTIONS, INCLUDING NECESSARY VALVES ON THE TEMPORARY WATER MAINS, TO ALL AFFECTED PREMISES WHERE THE RELOCATIONS OF THE EXISTING WATER MAIN AND CONSTRUCTION OF NEW SERVICE CONNECTIONS WILL RESULT IN THE INTERRUPTION OF SERVICE FOR PERIODS LONGER THAN FOUR (4) HOURS BETWEEN 6:00 A.M. AND MIDNIGHT. BETWEEN MIDNIGHT AND 6:00 A.M. SERVICES MAY BE INTERRUPTED FOR THE ENTIRE SIX (6) HOUR PERIOD. THE PROVIDING OF TEMPORARY WATER MAINS SHALL ALSO INCLUDE FLUSHING, TESTING, SAMPLING AND, IF REQUIRED, CHLORINATION;

(B) THE CONTRACTOR SHALL SUBMIT A PLAN FOR MAINTAINING WATER SERVICE IN CONFORMANCE WITH THE REQUIREMENTS HEREIN STIPULATED. THE PLAN SHALL ALSO SPECIFY ALL CONSTRUCTION METHODS AND MATERIALS UTILIZED AND MEET THE APPROVAL OF THE ENGINEER, LOCAL FIRE DEPARTMENT AND THE CITY OF CLEVELAND WATER DEPARTMENT BEFORE THE CONTRACTOR BEGINS ANY OF THE WATER WORK. APPROVAL OF SUCH A PLAN FOR TEMPORARY WATER MAINS SHALL NOT RELIEVE THE CONTRACTOR OF RESPONSIBILITY FOR PROVIDING SUFFICIENT SUPPLY. THE CONTRACTOR SHALL AT HIS OWN EXPENSE INCREASE THE SIZES OF THE TEMPORARY WATER MAINS BEYOND THE SIZES INDICATED ON THE PLANS IF THE SIZES NOTED IN THESE SPECIFICATIONS ARE FOUND TO BE INSUFFICIENT.

(C) TEMPORARY WATER MAINS SHALL BE PLACED ON ONE OR BOTH SIDES OF THE STREET. CONNECTIONS ARE PERMISSIBLE ONLY ON THE SIDE OF THE STREET ON WHICH THE PARTICULAR TEMPORARY MAIN IS LOCATED. THE TEMPORAY MAINS SHALL NOT OBSTRUCT ANY STREETS, SIDEWALKS OR DRIVEWAYS, TRENCHING OR RAMPING SHALL BE PERFORMED AS REQUIRED TO PROVIDE PROTECTION FOR THE TEMPORAY WATER MAINS AND TO PROVIDE FOR THE SAFE MOVEMENT OF VEHICULAR AND PEDESTRIAN TRAFFIC.

(D) SIZES FOR TEMPORAY WATER MAINS SHALL BE AS FOLLOWS:

1. WHERE IT IS NOT POSSIBLE TO HAVE BOYH RELOCATED/NEW AND EXISTING WATER MAINS SIMUTANEOUSLY IN SERVICE IN ORDER TO TRANSFER AND RECONNECT EXISTING SERVICE CONNECTIONS TO THE RELOCATED/NEW WATER MAIN, OR WHEN THE TIME REQUIRED TO PUT THE RELOCATED/NEW WATER MAIN, EXCLUDING SERVICE CONNECTIONS, INTO SERVICE EXCEEDS DURATIONS SPECIFIED IN PARAGRAPH "A", THE SIZES FOR TEMPORARY WATER MAINS SHALL BE AS FOLLOWS:
   - A. WHEN WITHIN THE LIMITS OF THE WATER MAIN RELOCATION NO SERVICE CONNECTIONS EXIST, OR SERVICE CONNECTIONS EXIST ON ONLY ONE SIDE OF THE STREET, THE TEMPORARY WATER MIAN SHALL NOT BE LESS THAN TWO (2) NOMINAL PIPE DIAMETERS SMALLER THAN EXISTING PIPE BUT IN NO CASE LESS THAN FOUR (4) INCHES IN DIAMETER AND SUCH TEMPORAY WATER MAIN SHALL BE PLACED ON ONLY ONE SIDE OF THE STREET.
   - B. WHEN WITHIN THE LIMITS OF THE WATER MAIN RELOCATIONS SREVICE CONNECTIONS EXIST ON BOTH SIDES OF THE STREET, THE TEMPORARY WATER MAINS SHALL NOT BE LESS THAN ONE (1) NOMINAL PIPE DIAMETER SMALLER THAN THE EXISTING PIPE BUT IN NO CASE BE LESS THAN SIX (6) INCHES IN DIAMETER AND SUCH TEMPORARY WATER MAINS SHALL BE PLACED ON BOTH SIDES OF THE STREET.
2. WHEN TEMPORARY WATER LINES AS DESCRIBED IN PARAGRAPH D–1 ARE NOT REQUIRED, BUT THE INTERRUPTION IN WATER SERVICE EXCEEDS THE DURATIONS SPECIFIED IN PARAGRAPH "A" BECAUSE OF THE TIME REQUIRED TO CONNECT NEW/RELOCATED WATER MAINS TO EXISTING WATER MAINS AND/OR TO RE–CONNECT EXISTING SERVICE CONNECTIONS TO THE NEW/RELOCATED MAIN, THE SIZES FOR TEMPORARY WATER MAINS, ON ONE OR BOTH SIDES OF THE STREET, AS REQUIRED, SHALL NOT BE LESS THAN THAT INDICATED BELOW PROVIDED THAT THESE SIZES ARE APPROVED BY THE FIRE DEPARTMENT OF THE MUNICIPALITY IN WHICH THE WORK IS BEING PERFORMED.
   - A. FOR SERVICE CONNECTIONS THREE–QUARTER (3/4) INCH OR LESS IN DIAMETER THE TEMPORARY WATER MAINS SHALL BE A MINIMUM OF TWO (2) INCHES INSIDE DIAMETER PIPE AND FITTINGS.
   - B. FOR SERVICE CONNECTIONS LARGER THAN THREE–QUARTER (3/4) INCH IN DIAMETER THE TEMPORARY WATER MAINS SHALL BE A MINIMUM OF FOUR (4) INCHES INSIDE DIAMETER PIPE AND FITTINGS.

(E) THE CONTRACTOR SHALL BE RESPONSIBLE FOR ANY REQUIRED REPAIRS TO, OR REPLACEMENT OF, DAMAGED TEMPORARY WATER MAINS AND APPURTENANCES. THE CONTRACTOR SHALL ALSO BE RESPONSIBLE FOR MAINTAINING AND REPAIRING ANY DAMAGED PAVEMENT, SIDEWALKS, CURBS, TREELAWNS OR OTHER AREAS DISTURBED BY THE INSTALLATION; AND OR MAINTENANCE OR REPAIR OF THE TEMPORARY WATER MAINS, TEMPORARY SERVICE CONNECTIONS AND APPURTENANCES THERETO. PAYMENT FOR THIS WORK SHALL BE INCLUDED IN THE CONTRACT LUMP SUM PRICE BID FOR "ITEM SPECIAL – MAINTENANCE OF WATER SERVICE".

(F) THE CONTRACTOR SHALL NOT PUT ANY TEMPORARY WATER MAINS INTO SERVICE UNTIL THE CITY OF CLEVELAND HAS PROVIDED WRITTEN CONFIRMATION THAT SUFFICIENT WATER VOLUMES AND PRESSURES ARE AVAILABLE TO SUPPLY THE TEMPORARY WATER MAINS AND APPURTENANCES. NO TEMPORARY WATER MAIN WILL BE ALLOWED TO BE PLACED IN SERVICE WITHOUT AN APPROVED PLAN AS INDICATED IN PARAGRAPH "B".

(G) THE TEMPORARY WATER MAIN AND ALL APPURTENANCES SHALL BE FURNISHED, MAINTAINED AND REMOVED BY THE CONTRACTOR. THE TEMPORARY WATER MAIN PIPE AND APPURTENANCES FURNISHED SHALL BE CLEAN AND IN SUCH CONDITION THAT THEY MAY BE TESTED, FLUSHED, CHLORINATED AND PRODUCE SATISFACTORY WATER SAMPLES AS REQUIRED BY THE CITY. ANY NECESSARY CHLORINATION SHALL BE DONE BY THE CITY AS STIPULATED ELSEWHERE IN THESE SPECIFICATIONS, AND IF NOT INCLUDED AS PART OF AN O.D.O.T. FORCE ACCOUNT AGREEMENT, SHALL BE DONE AT THE CONTRACTOR'S EXPENSE. ALL CONNECTIONS TO THE TEMPORARY WATER MAIN SHALL BE MADE BY THE CONTRACTOR UNDER THE SUPERVISION OF THE CITY.

ITEM SPECIAL – MAINTENANCE OF WATER SERVICE (CON:T.)

(H) THE CONTRACTOR SHALL MINIMALLY INSTALL TEMPORARY FOUR (4) INCH FIRE HYDRANTS AT EACH LOCATION WHERE A PERMANENT FIRE HYDRANT IS TAKEN OUT OF SERVICE OR USED TO SUPPLY A TEMPORARY WATER MAIN.

ITEM SPECIAL – TEMPORARY WATER SERVICE CONNECTION, COMPLETE

WORK INCLUDED

THE CONTRACTOR SHALL FURNISH AND INSTALL THE TEMPORARY WATER SERVICE CONNECTION(S) INCLUDING PIPE AND FITTINGS AT LOCATIONS SHOWN ON THE PLANS. THE MATERIAL USED FOR PROVIDING THE TEMPORARY WATER SERVICE 3" AND UNDER CONNECTION SHALL BE APPROVED BY THE ENGINEER AND THE DIVISION OF WATER. MATERIAL USED FOR PROVIDING THE TEMPORARY WATER SERVICE 4" AND LARGER SHALL CONFORM WITH THE SPECIFICATIONS FOR DUCTILE IRON WATER MAINS.

PAYMENT

(A) THE WORK INCLUDED IN THIS ITEM SHALL BE PAID FOR AT THE CONTRACT UNIT PRICE BID PER EACH CLASSIFIED AS TO SIZE FOR "ITEM SPECIAL – TEMPORARY WATER SERVICE CONNECTION, COMPLETE", WHICH PRICE SHALL CONSTITUTE FULL PAYMENT SHALL INCLUDE THE EXCAVATION, BACKFILLING, DIVISION OF WATER TAPPING FEE (IF APPLICABLE) AND THE FURNISHING OF ALL LABOR, TOOLS, MATERIALS AND ALL EQUIPMENT AND INCIDENTALS NECESSARY TO COMPLETE THE WORK IN PLACE AS SHOWN. SEEDIND AND SODDING, REPAVING (BOTH TEMPORARY AND PERMANENT), SIDEWALK REPLACEMENT AND OTHER SITE RESTORATION SHALL BE INCLUDED IF NOT PAID FOR SEPARATELY UNDER OTHER ITEMS INDICATED IN THE PLANS.

(B) THE DIVISION OF WATER WILL REQUIRE THAT THE CONTRACTOR PAY ALL DIVISION OF LABOR CHARGES FOR "FLUSHING, TESTING AND SAMPLING" OF THE TEMPORARY WATER SERVICE CONNECTION IN ACCORDANCE WITH THE FEE SCHEDULE INDICATED IN THE GENERAL NOTES "DIVISION OF WATER CHARGES". PAYMENT FOR DIVISION OF WATER LABOR SHALL BE MADE TO THE PERMITS AND SALES SECTION PRIOR TO ANY WATER SERVICE CONNECTION WORK BEING PERFORMED.

(C) UPON COMPLETION OF WATER WORK AND THE TEMPORARY CONNECTION IS NO LONGER NEEDED, THE CONTRACTOR SHALL REMOVE THE TEMPORARY CONNECTION AND REPLACE THE DAMAGED SEEDED, SODDED OR PAVED AREAS IF NOT PAID FOR SEPARATELY UNDER OTHER ITEMS OF WORK IN THIS CONTRACT.

ITEM SPECIAL – EXTEND/SHORTEN AND ADJUST HYDRANT TO GRADE, TYPE A

WORK INCLUDED

TYPE A

THE WORK INCLUDED UNDER THIS ITEM SHALL CONSIST OF EXTENDING/SHORTENING AND ADJUSTING EXISTING HYDRANTS TO GRADE AS DETAILED ON SHEET 13 OF 13 AND AT THE LOCATIONS SHOWN ON THE PLANS OR AS DIRECTED BY THE ENGINEER, INCLUDING EXCAVATING, REMOVING AND RESETTING OF HYDRANT, EXTENDING OF BRANCH PIPE, VALVE BOX ADJUSTMENT, SHEETING AND BRACING, BACKFILL, LABOR, MATERIALS, EQUIPMENT, TOOLS AND INCIDENTALS NECESSARY TO MAKE THIS A COMPLETE ITEM OF WORK.

SETTING

(A) GENERAL LOCATION: THE HYDRANT SHALL BE LOCATED IN A MANNER TO PROVIDE COMPLETE ACCESSIBILITY, AND IN SUCH A MANNER THAT THE POSSIBILITY OF DAMAGE FROM VEHICLES OR INJURY TO PEDESTRIANS WILL BE MINIMIZED.

(B) LOCATION REGARDING CURB LINES: WHEN PLACED BEHIND CURB THE HYDRANT SHALL BE SET SO THAT THERE IS A MINIMUM OF TWO (2) FEET OF CLEARANCE FROM THE FACE OF CURB TO THE CLOSEST PORTION OF THE HYDRANT.

(C) LOCATION REGARDING SIDEWALK: WHEN SET IN THE LAWN SPACE BETWEEN THE CURB AND THE SIDEWALK OR BETWEEN THE SIDEWALK AND THE PROPERTY LINE, NO PORTION OF THE HYDRANT OR NOZZEL CAP SHALL BE WITHIN 6 INCHES OF THE SIDEWALK.

(D) POSITION OF NOZZLE: THE HYDRANT SHALL STAND PLUMB WITH THE NOZZLES POINTING TOWARD THE ROAD AT AN ANGLE OF 45 THEREFROM. WHERE THE HYDRANT BRANCH PIPING IS PARALLEL WITH OR NOT AT RIGHT ANGLES TO THE CURB, THE CONTRACTOR SHALL RELEASE SWIVEL HEAD BOLTS AND ADJUST THE HYDRANT NOZZLES TO FACE THE ROAD AT THE PROPER ANGLE. A HYDRANT WITHOUT SWIVEL HEADS WILL BE ADJUSTED BY THE CITY OF CLEVELAND WHERE NECESSARY TO CORRECT THE ANGLE OF THE NOZZLES. THE ELEVATION SHALL CONFORM TO THE ESTABLISHED GRADE WITH TOPS OF FROST CASING AT LEAST FOUR INCHES ABOVE GRADE.

(E) DRAINAGE AT HYDRANT: DRAINAGE SHALL BE PROVIDED AT THE BASE OF THE HYDRANT BY FILLING AROUND THE ELBOW WITH COARSE GRAVEL OR CRUSHED STONE TO AT LEAST 6 INCHES ABOVE THE WASTE OPENING. WHEREVER A HYDRANT IS SET IN ROCK, CLAY OR OTHER IMPERVIOUS SOIL, THE TRENCH SHALL BE WIDENED AND DEEPENED ON EACH SIDE OF THE HYDRANT BASE AND THE SPACE SHALL BE FILLED COMPACTLY WITH COARSE GRAVEL OR BROKEN STONE MIXED WITH COARSE SAND OF SUFFICIENT QUANTITY TO ABSORB ALL WATER TO BE DRAINED FROM THE HYDRANT WHEN THE VALVE IS CLOSED.

(F) ANCHORAGE FOR HYDRANT: THE HYDRANT SHALL BE SET ON A STONE SLAB OR SIMILAR FOUNDATION AND THE BASE OF THE HYDRANT AND THE HYDRANT TEE SHALL BE WELL BRACED AGAINST UNEXCAVATED EARTH AT THE END OF THE TRENCH WITH CONCRETE BACKING, OR IT SHALL BE TIED TO THE PIPE WITH SUITABLE RODS OR CLAMPS AS DIRECTED BY THE ENGINEER.

ITEM SPECIAL – EXTEND/SHORTEN AND ADJUST HYDRANT TO GRADE, TYPE A

WORK INCLUDED (CONT'D.)

(G) CLEANING: THE HYDRANT SHALL BE THOROUGHLY CLEANED OF DIRT AND FOREIGN MATTER BEFORE SETTING.

PAYMENT

THE UNIT PRICE STIPULATED FOR EACH "ITEM SPECIAL – EXTEND/SHORTEN AND ADJUST HYDRANT TO GRADE, BY TYPE" SHALL INCLUDE ALL EXCAVATION, SHEETING, REMOVING AND RESETTING HYDRANT, EXTENDING OR REPLACING BRANCH PIPE, ADJUSTMENT OR REPLACEMENT OF VALVE AND VALVE BOX, TESTING, PAINTING, BACKFILLING AND FURNISHING ALL LABOR, TOOLS, MATERIALS, AND INCIDENTALS NECESSARY TO COMPLETE THE WORK IN PLACE AS STATED ABOVE.

ITEM SPECIAL – WATER SERVICE CONNECTION

GENERAL

NEW AND UNUSED MATERIALS SHALL BE USED IN THE FOLLOWING SITUATION INVOLVING WATER SERVICE CONNECTIONS.

1. WHERE A SERVICE CONNECTION IS DISTURBED FOR LOWERING, RAISING OR RELOCATING BETWEEN THE WATER MAIN AT THE "CORPORATION SHUTOFF VALVE" AND THE CURB SHUTOFF VALVE, IT SHALL BE TOTALLY REPLACED WITH NEW AND UNUSED MATERIALS, FROM THE "CORPORATION SHUTOFF VALVE" TO CURB SHUTOFF VALVE.

2. WHERE A SERVICE CONNECTION IS DITURBED FOR LOWERING, RAISING, OR EXTENDING ON THE "PROPERTY SIDE" OF THE CURB SHUTOFF VALVE, THE PIPING MATERIALS AND FITTINGS SHALL BE TOTALLY REPLACED WITH NEW AND UNUSED MATERIALS FROM THE EXISTING CURB SHUTOFF VALVE TO THE NEW CURB SHUTOFF VALVE REQUIRED AS A RESULT OF THE EXTENSION.

HOWEVER, IF THE EXISTING SERVICE CONNECTION ENCOUNTERED IN THE WORK IS FOUND TO BE LEAD OR GALVANIZED PIPE, IT IS TO BE TOTALLY REPLACED FROM "COPORATION SHUTOFF VALVE" TO THE "CURB SHUTOFF VALVE" WITH COPPER.

THE ADDITIONAL COPPER PIPING WILL BE PAID FOR SEPARATELY UNDER "ITEM SPECIAL – COPPER WATER TUBING" WITH THE CONTRACTOR BEING RESPONSIBLE TO FURNISH THE PROPER SIZE PIPE.

3. WHERE A SERVICE CONNECTION IS DISTURBED FOR LOWERING, RAISING OR EXTENDING, IT SHALL BE EXTENDED IN A STRIGHT PROLONGATION OF THE EXISTING CONNECTION AND WHERE THE "PROPERTY SIDE" SERVICE CONNECTION PIPING IS NOT IMMEDIATELY CONTIGUOUS TO THE EXTENDED SERVICE CONNECTION CURB SHUTOFF, ALL LABOR, MATERIALS AND EQUIPMENT REQUIRED TO RECONNECT SHALL BE PROVIDED BY THE CONTRACTOR. THE CONTRACTOR WILL ALSO INSTALL THE MATERIAL AND COMPLETE THE RECONNECTION TO RESTORE SERVICE, HOWEVER, ANY RECONNECTION ON THE "PROPERTY SIDE" OF THE CURB SHUTOFF MUST BE PARALLEL TO THE STREET CENTERLINE OR RIGHT–OF–WAY FROM THE CURB SHUTOFF. IF UPON INSPECTION OF THE "PROPERTY SIDE" PIPING, IT IS FOUND UNSUITABLE FOR SUCH RECONNECTION, THE CONNECTION SHALL NOT BE DISTURBED UNTIL SUCH TIME AS THE MUNICIPALITY HAS ARRANGED FOR REPLACEMENT.

4. WHERE A CONNECTION IS INADVERTENTLY DAMAGED OR BROKEN WHICH WAS NOT TO BE DISTURBED, ONLY THE DAMAGED PORTION NEEDS TO BE REPLACED. IF THE EXTENT OF DAMAGE CANNOT BE FULLY ASSESSED, THE CONNECTION SHALL BE REPLACED, AS NOTED IN ITEM 1 ABOVE, AT THE CONTRACTOR'S EXPENSE.

5. ANY TAPPING REQUIRED SHALL BE PERFORMED BY THE CONTRACTOR. THE CONTRACTOR MUST BE QUALIFIED TO TAP MAINS IN ACCORDANCE WITH THE "PREQUALIFICATIONS OF CONTRACTOR FOR TAPPING" GENERAL NOTE.

WORK INCLUDED

IN ADDITION TO THE WORK DESCRIBED ABOVE, THE CONTRACTOR SHALL INSTALL NEW AND/OR RECONSTRUCT WATER SERVICE CONNECTIONS AS DETAILED IN THE PLANS.

PIPE MATERIAL FOR SERVICE CONNECTIONS

THE FOLLOWING PIPE MATERIAL SHALL BE USED FOR THE SERVICE CONNECTIONS ON THIS PROJECT:

COPPER WATER TUBING, TYPE K, ASTM B88–74, 5/8" TO 3" DIAMETER

PAYMENT

THE FOLLOWING PAY ITEMS ARE LISTD IN THE GENERAL SUMMARY FOR WATER SERVICE CONNECTION WORK:

ITEM SPECIAL – RETAP AND RECONNECT (¾") WATER SERVICE CONNECTION, SHORT SIDE, COMPLETE

ITEM SPECIAL – RETAP AND RECONNECT (1½") WATER SERVICE CONNECTION, SHORT SIDE, COMPLETE

THE CONTRACT UNIT PRICE BID FOR EACH ITEM SPECIAL, CLASSIFIED BY SIZE, SHALL INCLUDE THE EXCAVATION, BACKFILLING, TAPPING AND FURNISHING OF ALL LABOR, TOOLS, NEW MATERIAL, AND EQUIPMENT AND INCIDENTAL NECESSARY TO COMPLETE THE WORK IN PLACE AS SHOWN. SEEDING, SODDING AND REPAVING SHALL ALSO BE INCLUDED IF NOT PAID FOR SEPARATELY IN THE PLANS.

IF NEW CURB BOXES ARE REQUIRED, AS DETERMINED BY THE ENGINEER, THEY SHALL BE FURNISHED AND PAID FOR UNDER ITEM SPECIAL – "MISCELLANEOUS METAL WORK".

SFN: 1833936 Stokes 0031 (4:021)

WATERWORK NOTES

CUYAHOGA COUNTY
CUY – STOKES BLVD.

OHIO
FHWA REGION 5

23A 58

9A 13

EXTEND: (Installation Only – General service and fire lines)

1"	$ 55.00	4"	$ 710.00
1" (Singular)	$ 95.00	6"	$ 745.00
1½"	$ 445.00	8"	$ 840.00
2"	$ 480.00	10"	$ 1,000.00
3"	$ 555.00	12"	$ 1,400.00

FIRE LINES – O.S. & Y. AND CHECK VALVES: (Labor Only – Assemble and install; or remove and reset)

4"	$ 100.00	10"	$ 175.00
6"	$ 125.00	12"	$ 200.00
8"	$ 150.00		

METERS – BYPASS AND CHECK VALVES: (Labor Only – Assemble and install; or remove and reset)

1 ½"	$ 190.00	6"	$ 375.00
2"	$ 190.00	8"	$ 475.00
3"	$ 190.00	10"	$ 600.00
4"	$ 285.00	12"	$ 725.00

BACKFLOW PREVENTION DEVICE: (Labor Only – Remove and reset)

1 ½"	$ 190.00	6"	$ 375.00
2"	$ 190.00	8"	$ 475.00
3"	$ 190.00	10"	$ 600.00
4"	$ 285.00	12"	$ 725.00

PLUGGING SERVICE CONNECTIONS AND WATER MAINS:

Main Size	
⅝ through 2"	$ 115.00
3" through 12"	$ 475.00
16" and larger	$ 500.00 Deposit (Cost plus)

RESETTING OF SMALL METERS: (Labor Only – Cost of meter not included)

1" and smaller	$ 40.00

CURB VALVES: (Labor Only – On installation requiring an easement, inside meter, or fire line)

1 ½" and 2"	$ 60.00
3' through 8"	$ 120.00
10" through 12"	$ 200.00

CHLORINATION: (Labor Only)

Main Size	Cost Per Foot	Minimum Charge
6"	$ 0.35	$ 420.00
8"	$ 0.45	$ 485.00
10"	$ 0.45	$ 485.00
12"	$ 0.55	$ 550.00
16"	$ 0.60	$ 630.00
20" and larger	Actual Cost	Actual Cost

FLUSH, TEST AND SAMPLE: (Labor Only)

Where length of new/relocated/lowered pipe is 350 feet of less – $ 250.00

DIVISION OF WATER – LABOR CHARGES

The City, Division of Water, will charge to the Contractor certain charges pursuant to Section 531.03(a) of the Codified Ordinances of the Division of Water, as amended by Ordinance 1043–75 and adopted by the City of Cleveland Board of Control Resolution No: 003–82, and per Ordinance No: 2661–81, for Division of Water labor required in the work, payable to the permits and sales section of the Division of Water before any work is performed. Note that the charges indicated herein are subject to change and that the Contractor shall verify the latest charges with the permits and sales section of the Division of Water.

The Contractor shall provide in his bid, included with the appropriate pay item for water work to be performed in this contract, any and all City of Cleveland, Division of Water, labor charges in the amounts indicated herein. No compensation will be provided to the Contractors by the State for Division of Water labor charges for work required to be performed by the Division of Water but the required division of labor charges will be the sole responsibility of the Contractor(s) and shall be deemed to be included in the price bid for the appropriate water work pay item.

Division of Water charges stipulated herein are on a flat rate basis, unless otherwise specified as a "Deposit – Cost Plus" basis.

Any work performed on concrete water mains will be priced 55% above the charges indicated below.

NEW CONNECTIONS: (Installation Only – General service and fire lines)

1"	$ 55.00	4"	$ 710.00
1" (Singular)	$ 95.00	6"	$ 745.00
1½"	$ 445.00	8"	$ 840.00
2"	$ 480.00	10"	$ 1,000.00
3"	$ 555.00	12"	$ 1,400.00

RETAP AND RECONNECTS: (Installation Only – General service and fire lines)

1"	$ 55.00	4"	$ 710.00
1" (Singular)	$ 95.00	6"	$ 745.00
1½"	$ 445.00	8"	$ 840.00
2"	$ 480.00	10"	$ 1,000.00
3"	$ 555.00	12"	$ 1,400.00

TAPPING SLEEVES AND VALVES: (Labor Only – Install, tap and test)
See paragraph "Work To Be Done By City"

Main Size		Main Size	
6" or less	$ 465.00	12"	$ 505.00
8"	$ 475.00	16"	$ 595.00
10"	$ 485.00	20"	$ 1,800.00 Deposit (Cost plus)

PIPE CUTTING: (Per cut)

Main Size	
8" or less	$ 150.00
10" or 12"	$ 180.00
16" or more	$ 600.00 Deposit (Cost plus)

Stokes 0031 (4:021) SFN: 1833936

CALC. BY ____ DATE ____
CHKD. BY ____ DATE ____

CUYAHOGA COUNTY
CUY–FAIRHILL ROAD

OHIO
FHWA REGION 5

24/58

10/13

STA. 13+42 (19.0' L.) ±
EXIST. SERVICE BOX
ADJUST TO GRADE

EXIST. SERVICE
CONN. #289465

STA. 14+50 (2.0'L.)
EXIST. WATER VALVE
ADJUST TO GRADE

STA. 14+45 (7.0'L.)
EXIST. WATER VALVE
ADJUST TO GRADE

STA. 14+69 (11.0'L.)
EXIST. WATER MANHOLE
RECONSTRUCT TO GRADE

STA. 14+87(±) (10.0'L.)
BEGIN 12" WATERMAIN RELOCATION
CAST IRON TO DUCTILE IRON
TRANSITION SLEEVE * TO 6"
CLOSURE PIECE TO 12" x 6"
DUCTILE IRON REDUCER WITH
NIPPLES TO FULL LENGTH OF
OF 12" PIPE

STA. 15+01.50 (25.5'L.)
INSTALL ⅛ BEND WITH CONC. PIER

STA. 15+26 (37.0'L.)
EXIST. WATER MANHOLE
TO BE REMOVED

N

STA. 17+56 (36.5'L.)
INSTALL ⅛ BEND WITH CONC. PIER
TO FULL LENGTH OF 12" PIPE

STA. 17+45 (25.5'L.)
INSTALL ⅛ BEND WITH CONC.
PIER

STA. 17+30 (±)
EXIST. ¾" SERVICE
CONN. #330451
RETAP AND RECONNECT
¾" WATER SERVICE CONN.
SHORT SIDE, COMPLETE

STA. 17+27 (36.0'L.)
EXIST. WATER MANHOLE
TO BE REMOVED

STA. 17+74(±), EXIST. 1½" SERVICE CONN. # 289465
RETAP AND RECONNECT 1½" WATER SERVICE CONN.
SHORT SIDE, COMPLETE

STA. 17+77 (42.0'L.)
EXIST. WATER MANHOLE
RECONSTRUCT TO GRADE

STA. 17+80(±) (36.5'L.)
END 12" WATERMAIN RELOCATION
12" x 6" DUCTILE IRON REDUCER
WITH NIPPLES TO 6" CLOSURE
PIECE TO CAST IRON TO DUCTILE
IRON TRANSITION SLEEVE *

PROVIDE TEMPORARY
2" SERVICE CONNECTION
FOR #330451 AND #289465

STA. 18+70 (36.0'L.)
EXIST. HYDRANT
SHORTEN AND ADJUST
TO GRADE (32.0'L.)

EXIST. 6" WATERMAIN
TO BE REMOVED

RELOCATED 12" WATERMAIN

C.E.I. 11–4" DUCTS &
8–4" DUCTS

C.E.I. 6–4" DUCTS

C.E.I. 4–4½" DUCTS

EXIST. 6" WATER

EXIST. 48" WATER

EXIST. 36" WATER

EXIST. 30" WATER

EXIST. 24" WATER

12" STM.

M.H.

W.V.

F.H.

O.B.T. 9 MTD.

6–C.P.P. DUCTS

R/W

SEE TEMPORARY WATERMAIN AND HYDRANT CONNECTION ASSEMBLY DETAIL SHEET 11/13

4" TEMPORARY BY–PASS (ON BRIDGE)

STA. 17+39 (13.0'L.)
EXIST. WATER MANHOLE
RECONSTRUCT TO GRADE

STA. 14+00 (5.0'R.)
EXIST. WATER MANHOLE
RECONSTRUCT TO GRADE

1–STORY BRICK BLDG.

STA. 14+40 (20.0'R.)
EXIST. WATER VALVE
ADJUST TO GRADE

STA. 14+40 (29.0'R.)
EXIST. HYDRANT
EXTEND AND ADJUST
TO GRADE (33.0'R.)

4" TEMPORARY
BY–PASS

STA. 14+60 (3.0'R.)
EXIST. WATER VALVE
ADJUST TO GRADE

STA. 14+60 (17.0'R.)
EXIST. WATER VALVE
ADJUST TO GRADE

WOODHILL RD.
DIVERSION

STA. 17+66 (14.0'L.)
EXIST. WATER VALVE
ADJUST TO GRADE

4" TEMPORARY
BY–PASS

STA. 17+26 (43.0'R.)
EXIST WATER MANHOLE
RECONSTRUCT TO GRADE

STA. 18+70 (2.0'L.)
EXIST. WATER VALVE
ADJUST TO GRADE

STA. 18+55 (2.0'R.)
EXIST. WATER VALVE
ADJUST TO GRADE

12" DUCTILE IRON, CLASS 56 CEMENT LINED BOLTLESS RESTRAINED PUSH–ON JOINT PIPE WITH DUCTILE IRON CLASS 350 CEMENT LINED BOLTLESS RESTRAINED PUSH–ON JOINT FITTINGS

12" DUCTILE IRON, CLASS 52 CEMENT LINED BOLTLESS RESTRAINED PUSH–ON JOINT PIPE WITH DUCTILE IRON CLASS 350 CEMENT LINED BOLTLESS RESTRAINED PUSH–ON JOINT FITTINGS

12" GALVANIZED STEEL PIPE ASTM A53, GRADE B

STA. 14+87(±) (10.0'L.)
BEGIN 12" WATERMAIN RELOCATION
CAST IRON TO DUCTILE IRON TRANSITION
SLEEVE * TO 6" CLOSURE PIECE TO 12" x 6"
REDUCER WITH NIPPLES TO FULL LENGTH
OF 12" PIPE

STA. 15+24

V.P.I. STA. 15+22 (25.5'L.)
℄ ELEV. 732.58
⅛ BEND

STA. 17+15

STA. 17+80(±) (36.5'L.)
END 12" WATERMAIN RELOCATION
12" x 6" DUCTILE IRON REDUCER
WITH NIPPLES TO 6" CLOSURE PIECE
TO CAST IRON TO DUCTILE IRON
TRANSITION SLEEVE *

PROP. GRADE

EXIST. GRADE

RELOCATED 12" WATERMAIN
PROP. GRADE

EXIST. 24"
WATERMAIN

EXIST. 2–48" WATER
EXIST 36" WATER

EXIST. 6" WATER

STEEL TO DUCTILE IRON
CONNECTION (TYP.)
SEE DETAIL SHEET 12

H.P.I. STA. 15+01.5 (25.5'L.)
INSTALL ⅛ BEND WITH CONC. PIER

H.P.I. STA. 17+56 (36.5'L.)
INSTALL ⅛ BEND WITH CONC. PIER
TO FULL LENGTH OF 12" PIPE

V.P.I. STA. 15+14.81 (25.5'L.)
℄ ELEV. 725.39
⅛ BEND

V.P.I. STA. 17+17 (25.5'L.)
℄ ELEV. 734.87
⅛ BEND

EXIST. WATERMAIN TUNNEL

H.P.I. STA. 17+45 (25.5'L.)
INSTALL ⅛ BEND WITH CONC. PIER

V.P.I. STA. 17+23.87 (25.5'L.)
℄ ELEV. 728.00
⅛ BEND

* DRESSER STYLE 62 REDUCING COUPLINGS MAY BE USED IN PLACE OF TRANSITION SLEEVES

750 / 730 / 710 / 690 / 670 / 650

13 14 15 16 17 18 19

REVISIONS

LOW SERVICE DISTRICT

DEPARTMENT OF PUBLIC UTILITIES
CLEVELAND, OHIO

DIVISION OF WATER AND HEAT — CONTRACT NO. _____

SUBJECT: FAIRHILL ROAD WATER MAIN
WATERWORK PLAN AND PROFILE
BRIDGE OVER N. & W. R.R., CONRAIL, & G.C.R.T.A. – BRIDGE No. 4:021C

DRAWN BY _____
TRACED BY _____
CHECKED BY _____ DATE _____

SCALE 1"= 20'

NO. B–3048

WATERWORK PLAN AND PROFILE

Stokes 0031 (4:021) SFN: 1833936

CALC. BY DATE	CUYAHOGA COUNTY	OHIO
CHKD. BY DATE	CUY – FAIRHILL ROAD	FHWA REGION 5

25/58

11/13

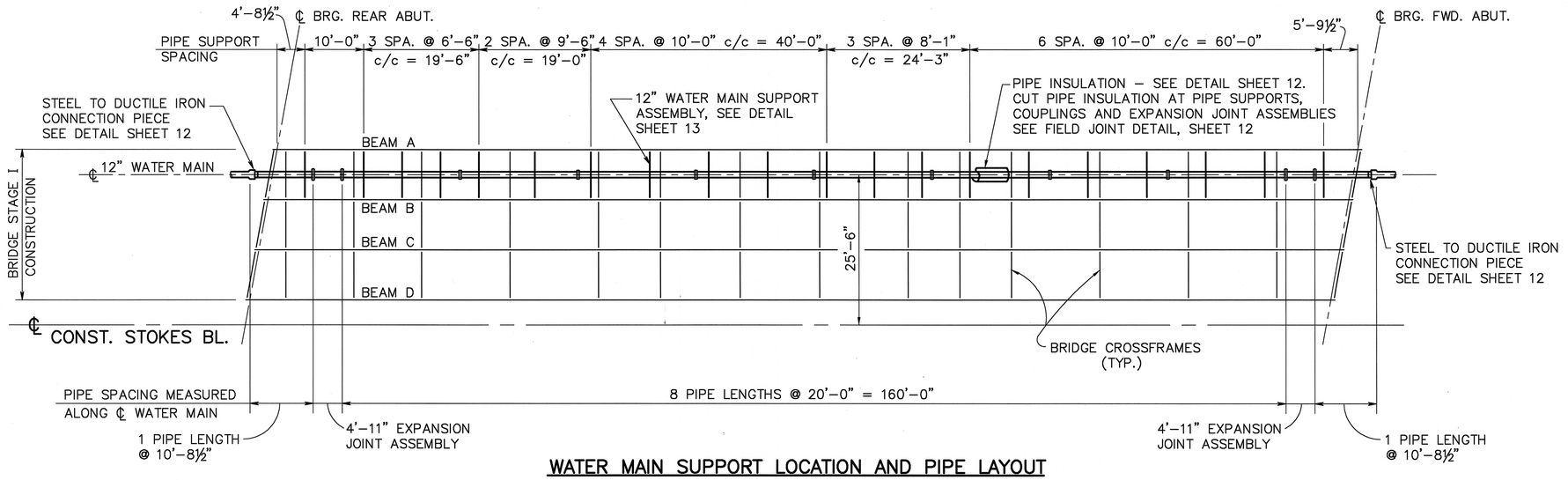

WATER MAIN SUPPORT LOCATION AND PIPE LAYOUT

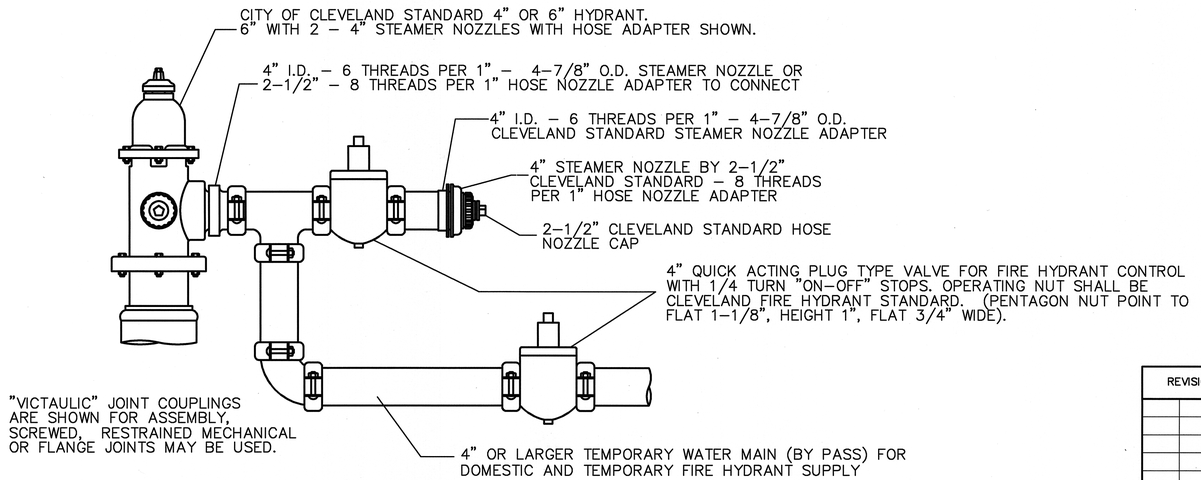

TEMPORARY WATER MAIN & HYDRANT CONNECTION ASSEMBLY–A

TO MAINTAIN SIMULTANEOUS SERVICE IN TEMPORARY HYDRANT AND TEMPORARY BYPASS MAIN

– NOT TO SCALE –

REVISIONS

LOW SERVICE DISTRICT

DEPARTMENT OF PUBLIC UTILITIES
CLEVELAND, OHIO

DIVISION OF WATER AND HEAT CONTRACT NO. _____

SUBJECT STOKES BOULEVARD WATER MAIN
WATERWORK DETAILS
BRIDGE OVER N. & W. R.R., CONRAIL, & G.C.R.T.A. – BRIDGE No. 4:021C

DRAWN BY _____ SCALE _____
TRACED BY _____
CHECKED BY _____ DATE _____

NO. B–3049

WATERWORK DETAILS

Stokes 0031 (4:021) SFN: 1833936

CALC. BY	CUYAHOGA COUNTY	OHIO
DATE	CUY – FAIRHILL ROAD	FHWA REGION 5
CHKD. BY		
DATE		

26/58

12/13

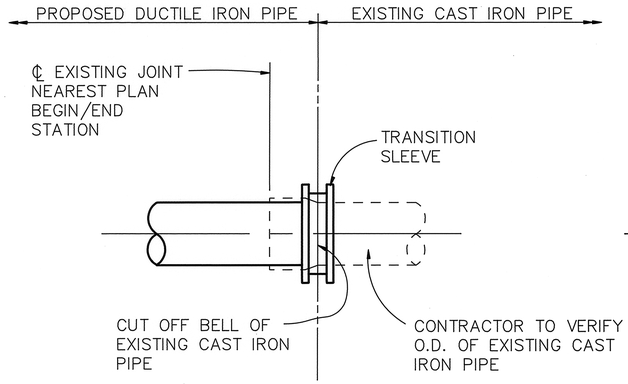

DUCTILE IRON TO CAST IRON PIPE CONNECTION DETAIL

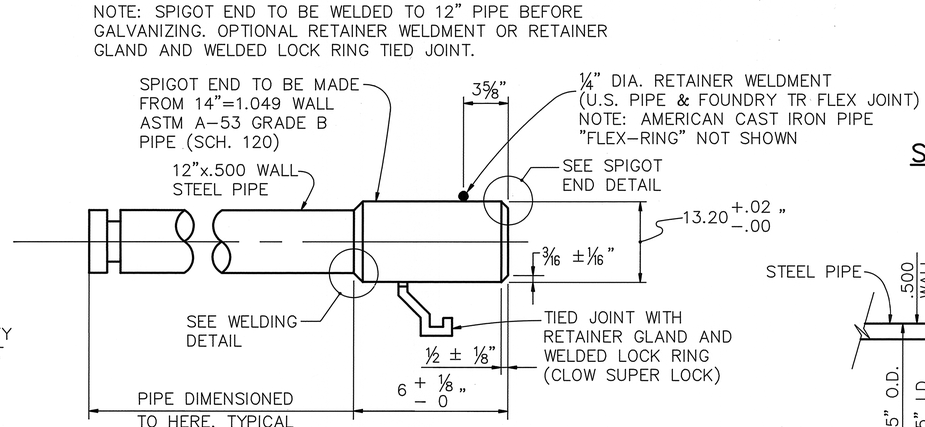

STEEL TO DUCTILE IRON PIPE CONNECTION DETAIL

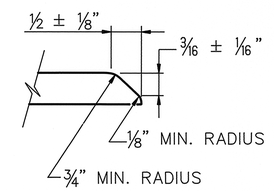

SPIGOT END DETAIL

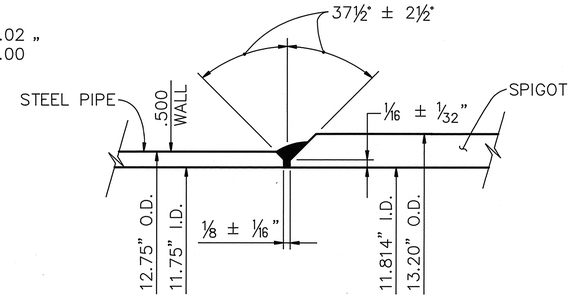

WELDING DETAIL

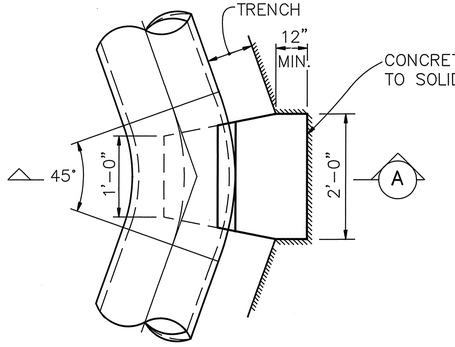

PLAN

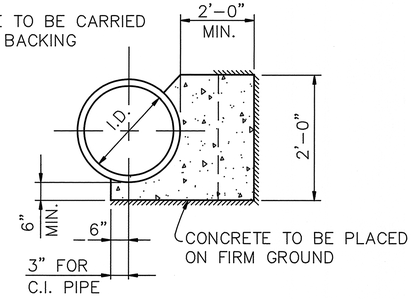

SECTION A

CONCRETE PIERS FOR BENDS

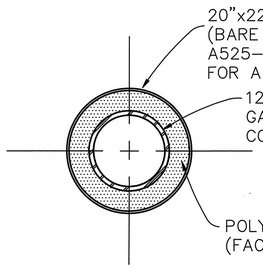

TYPICAL PHYSICAL DATA:

IN PLACE DENSITY (CORE), PCF – 1.9 – 2.1
K FACTOR (INITIAL), BTU – IN./HR. – FT² – °F – .11
CLOSED CELL CONTENT, % – 90
MVT, PERM-IN (100°F, WET CUP) – 3.2
COMPRESSIVE STRENGTH, PSI @ YIELD – 30

12" PIPE INSULATION DETAIL

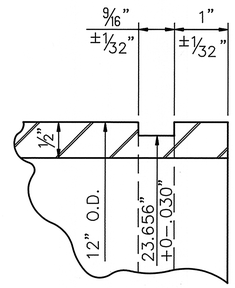

DETAIL AT END OF STEEL PIPE FOR VICTAULIC COUPLINGS STYLE No. 77

NOTE: STEEL H.T. CADMIUM PLATED BOLTS (110,000 P.S.I.) TO BE FURNISHED WITH VICTAULIC COUPLINGS

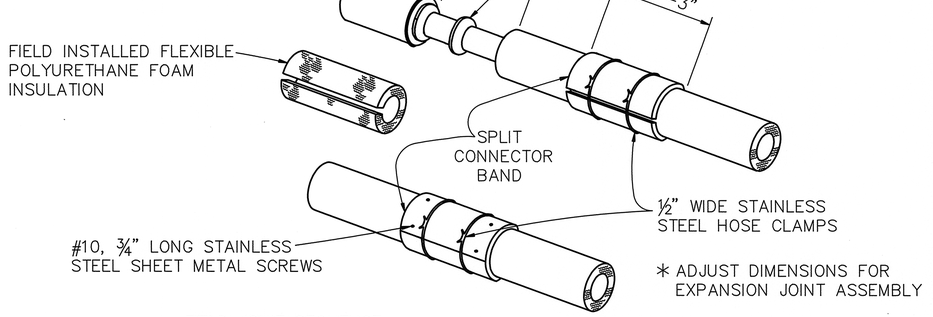

FIELD JOINT SEQUENCE

1.) SLIDE SPLIT CONNECTOR BAND ON TO UNIT. MAKE JOINT AND TEST.
2.) WRAP FLEXIBLE POLYURETHANE FOAM AROUND EXPOSED PIPE AND COUPLING AND TAPE INTO PLACE.
3.) APPLY BUTYL RUBBER SEALER TO BOTH SIDES OF JOINT.
4.) CENTER SPLIT CONNECTOR BAND OVER JOINT AND DRAW DOWN TIGHT WITH HOSE CLAMPS. SECURE SPLIT CONNECTOR BAND TO JACKET WITH SHEET METAL SCREWS (4 SCREWS PER END).

FIELD JOINT DETAILS

REVISIONS	LOW SERVICE DISTRICT
	DEPARTMENT OF PUBLIC UTILITIES, CLEVELAND, OHIO
	DIVISION OF WATER AND HEAT — CONTRACT NO.
	SUBJECT: FAIRHILL ROAD WATER MAIN; WATERWORK DETAILS
	BRIDGE OVER N. & W. R.R., CONRAIL, & G.C.R.T.A. – BRIDGE No. 4:021C
	DRAWN BY / TRACED BY / CHECKED BY / DATE / SCALE
	NO. B-3050

SFN: 1833936 Stokes 0031 (4:021)

CALC. BY		CUYAHOGA COUNTY	OHIO
DATE		CUY – FAIRHILL ROAD	FHWA REGION 5
CHKD. BY			
DATE			

27/58

13/13

NOTE: INSULATION AT WATER MAIN SUPPORTS IS NOT SHOWN, SEE FIELD JOINT DETAILS, SHEET 12 OF 13

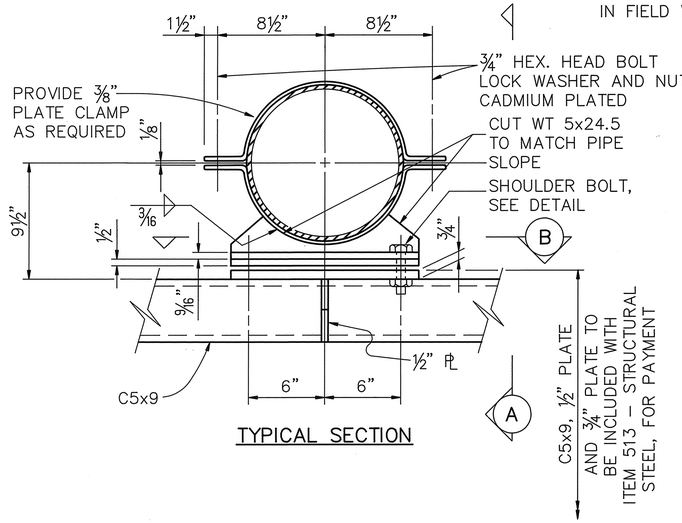

TYPICAL SECTION

NOTE: EXCEPT FOR BOLTS, LOCKWASHERS AND NUTS WHICH ARE CADMIUM PLATED, ENTIRE ASSEMBLY, INCLUDING SHIMS, IS TO BE HOT DIPPED GALVANIZED, ASTM A–123. SHIMS TO BE INSTALLED (OR DELETED) IN FIELD WHERE REQUIRED.

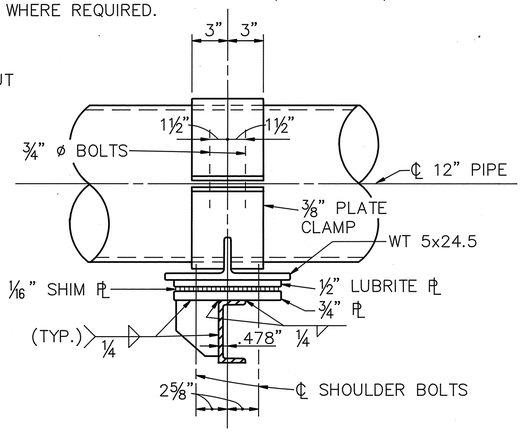

SECTION A

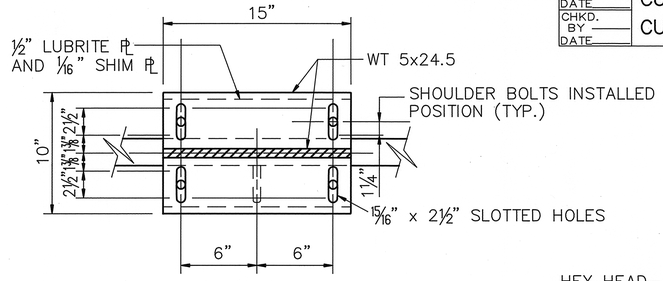

SECTION B

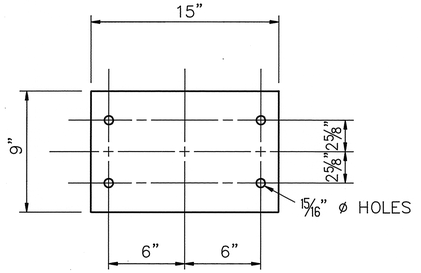

1/2" LUBRITE PLATE AND 1/16" STEEL SHIM PLATE

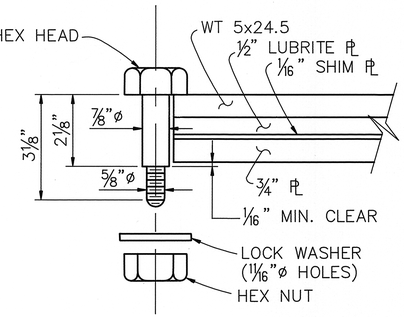

WATERMAIN PIPE SUPPORT ASSEMBLY DETAILS

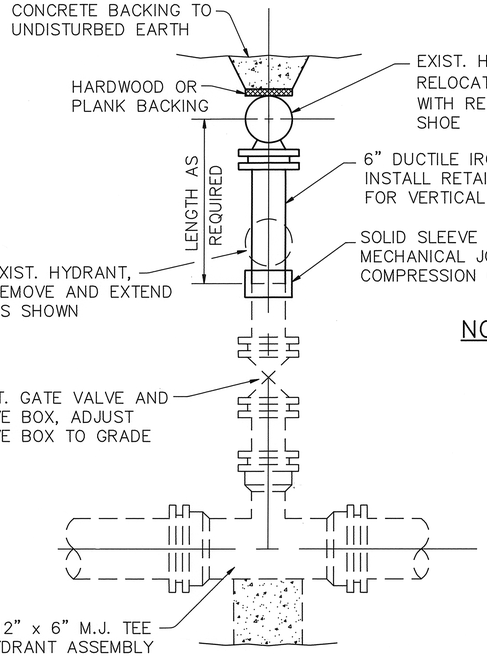

TYPE A

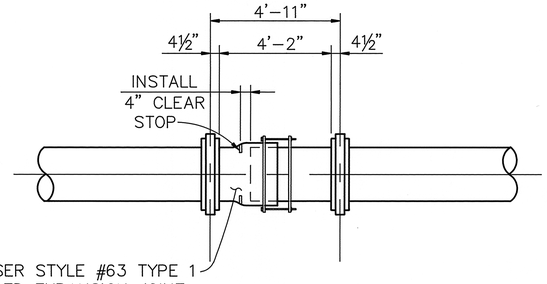

EXPANSION JOINT DETAIL

NOTES:

1. ALL PIPE AND FITTINGS FURNISHED FOR EXTENDING AND ADJUSTING HYDRANTS TO GRADE AS SHOWN, SHALL BE NEW AND UNUSED AND SHALL BE CEMENT MORTAR LINED IN ACCORDANCE WITH ANSI/AWWA–C104/A21.4.
2. ALL VALVES, BENDS AND FITTINGS SHALL HAVE RETAINED MECHANICAL JOINT ENDS. ALL MECHANICAL JOINTS SHALL BE POLYETHYLENE WRAPPED IN ACCORDANCE WITH ANSI/AWWA–C105/A21.5, CLASS "C", METHOD "C".
3. ALL BOLTS AND NUTS FURNISHED WITH MECHANICAL JOINTS OR RETAINED MECHANICAL JOINTS INCLUDING RETAINER OR WEDGE ACTION TYPE GLANDS SHALL BE COPPER–BEARING DUCTILE IRON, OR EQUIVALENT HIGH STRENGTH, LOW ALLOY CORROSION RESISTANT STEEL AND HAVE FIELD APPLIED ONE (1) COAT OF BITUMASTIC PAINTING PRIOR TO POLYETHYLENE WRAPPING.
4. ALL BOLTS AND NUTS ON COMPRESSION COUPLINGS SHALL BE STAINLESS STEEL ASTM A–276, TYPE 304.

EXTEND (SHORTEN) AND ADJUST HYDRANT TO GRADE

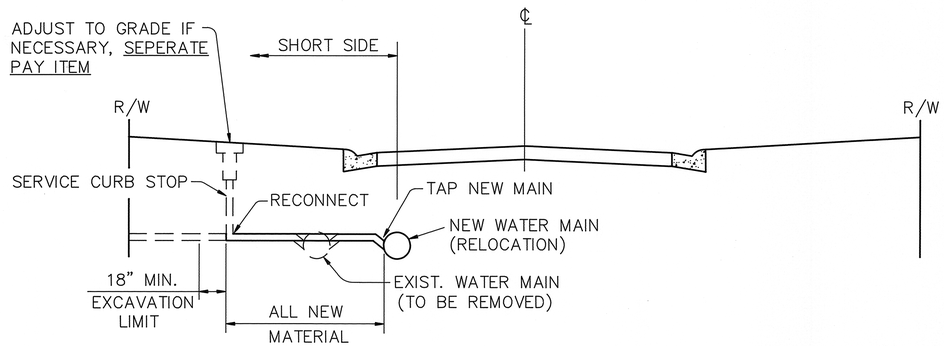

ITEM SPECIAL – RETAP AND RECONNECT WATER SERVICE CONNECTION, SHORT SIDE, COMPLETE

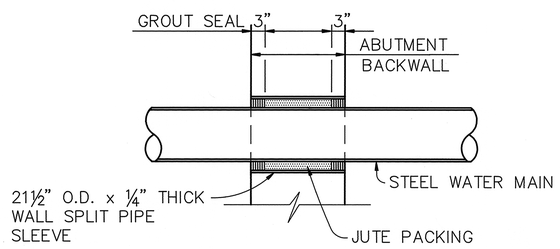

SLEEVE PACKING DETAIL

REVISIONS	LOW SERVICE DISTRICT
	DEPARTMENT OF PUBLIC UTILITIES, CLEVELAND, OHIO
	DIVISION OF WATER AND HEAT — CONTRACT NO.
	SUBJECT: FAIRHILL ROAD WATER MAIN / WATERWORK DETAILS
	BRIDGE OVER N. & W. R.R., CONRAIL, & G.C.R.T.A. – BRIDGE No. 4:021C
	DRAWN BY / TRACED BY / CHECKED BY / DATE / SCALE
	NO. B–3051

WATERWORK DETAILS

Stokes 0031 (4:021) SFN: 1833936

LIGHTING GENERAL NOTES

POWER SERVICE, AS PER PLAN

THE POWER SUPPLYING AGENCY FOR THIS PROJECT IS:
CITY OF CLEVELAND
CLEVELAND PUBLIC POWER
1201 LAKESIDE AVENUE
CLEVELAND, OHIO 44114
PHONE (216)663–3922

ELECTRICAL ENERGY FROM EXISTING POWER SERVICES SHALL CONTINUE TO BE CHARGED TO THE MAINTAINING AGENCY. THE CONTRACTOR SHALL PAY ELECTRICAL ENERGY CHARGES FOR NEW POWER SERVICES ESTABLISHED BY THIS PROJECT. UPON COMPLETION OF THIS PROJECT, POWER SERVICE ELECTRICAL ENERGY ACCOUNTS SHALL BE TRANSFERRED TO THE MAINTAINING AGENCIES NOTED IN THE PLANS. THIS SHALL INCLUDE NEW POWER SERVICE ESTABLISHED BY THIS PROJECT AS WELL AS REASSIGNMENT OF EXISTING SERVICE DUE TO WORK PERFORMED BY THIS PROJECT.

THE TYPE OF SERVICE REQUIRED IS 480 VOLT, 2 WIRE, SINGLE PHASE, GROUNDED NEUTRAL.

UTILITIES

SEE SHEET No. 3.

ITEM 625 – LIGHT POLE, MISC.: DESIGN A6B35, FIBERGLASS
ITEM 625 – LIGHT POLE, MISC.: DESIGN A10B35, FIBERGLASS

POLES SHALL BE A HOLLOW, TRUNCATED CONE OF SUITABLE WALL THICKNESS AND TAPER. THE TAPER SHALL BE UNIFORM FROM TOP TO BOTTOM (ANY SECTION SHALL BE CIRCULAR). POLES SHALL HAVE TENON TOPS WITH CAPS.

ANY POLE PROVIDED SHALL NOT WEIGH LESS THAN 95% OF THE MANUFACTURER'S ADVERTISED OR SPECIFIED WEIGHTS.

MATERIAL:

THE REINFORCING GLASS SHALL BE A COMMERCIAL GRADE OF "E" GLASS FIBERS IN CONTINUOUS FILAMENT, WOVEN FILAMENTS, CHOPPED STRAND FORMS OR A COMBINATION OF SAME. THE GLASS FIBERS SHALL BE TREATED WITH A COUPLING AGENT COMPATIBLE WITH THE RESIN USED. THE POLE SHALL BE NON–CONDUCTIVE AND CHEMICALLY INERT. THE THERMOSETTING RESIN SHALL CONTAIN ULTRAVIOLET INHIBITORS AND PIGMENT THROUGHOUT.

SURFACE:

THE POLE EXTERIOR SURFACE SHALL BE DARK BRONZE, SMOOTH AND UNIFORM IN TEXTURE AND COLOR AND SHOULD NOT CONTAIN ANY EXPOSED SURFACE FIBERS.

A NON–WOVEN POLYESTER FABRIC TAPE IS TO BE DOUBLE WRAPPED OVER THE UNCURED FIBERGLASS POLE. THE POLYESTER FABRIC IS TO BE PRE SATURATED WITH POLYESTER RESIN TO IMPREGNATE THE POLE AND INSURE A POSITIVE BOND. THE POLYESTER FABRIC TAPE IS TO BE APPLIED TO THE POLE TO MAINTAIN SURFACE INTEGRITY WITHOUT SIGNIFICANT NOTICEABLE CHANGE IN APPEARANCE TO ULTRAVIOLET, CHEMICALS AND EXTREME WEATHER CONDITIONS.

THE FINISHED COAT SHALL BE A HIGHLY WEATHER RESISTANT, COLOR PIGMENTED POLYURETHANE AND SHALL HAVE A DRY FILM THICKNESS OF 1 1/2 MIL MINIMUM.

THE SURFACE IS TO BE TESTED FOR MINIMUM OF 7,000 HOURS OF ACCELERATED TESTING IN ACCORDANCE WITH ASTM D–2565–83, OR LATEST REVISION, WITH THE FOLLOWING RESULTS:

FIBER EXPOSURE:	NONE
CRAZING:	NONE
CHECKING:	NONE
CHALKING:	SLIGHT
COLOR CHANGE:	MAY DULL SLIGHTLY

REINFORCING:

THE POLE SHALL BE REINFORCED IN THE AREA BETWEEN FOURTEEN (14) FEET AND TWENTY–FOUR (24) FEET ABOVE THE GROUND LINE TO ALLOW BAND MOUNTING OF CHRISTMAS ORNAMENTS OR BANNERS.

WIND LOADING:

THE POLE SHALL BE DESIGNED IN ACCORDANCE WITH 90 MPH (30% GUST FACTOR) AASHTO WIND LOADINGS.

POLE TOP:

THE POLE TOP SHALL BE A 3" OD X 3–3/4" LONG ALUMINUM TENON PERMANENTLY ATTACHED TO THE POLE SHAFT.

BASE PLATE AND COVER:

A ONE PIECE CAST ALUMINUM ANCHOR BASE (A356–T6 ALUMINUM) CASTING SHALL BE PROVIDED WHICH IS PERMANENTLY ATTACHED TO THE BOTTOM OF THE POLE. THE BASE SHALL BE ADHESIVELY BONDED TO THE POLE AND SHALL ALSO BE MECHANICALLY LOCKED TO THE POLE IN SUCH A MANNER THAT IT CANNOT COME LOOSE EVEN IF THE ADHESIVE BOND FAILS.

A REMOVABLE COVER OF THE SAME MATERIAL AND COLOR AS THE POLE SHALL BE PROVIDED THAT COMPLETELY SURROUNDS THE BASE. THE COVER SHALL ATTACH TO THE BASE WITH TWO STAINLESS SCREWS, DIAMETRICALLY OPPOSED.

ANCHOR BOLTS:

ANCHOR BOLTS FOR FOUNDATION MOUNTED POLES SHALL BE FURNISHED WITH THE POLE ASSEMBLY. ANCHOR BOLTS FOR STRUCTURE MOUNTED POLES SHALL BE FURNISHED UNDER A SEPARATE BID ITEM.

HAND HOLE:

POLES SHALL BE FURNISHED WITH A FOUR INCH BY SIX INCH MINIMUM HAND HOLE AND A REMOVABLE, LOCKABLE COVER AND SEAL. THE HAND HOLE SHALL BE OF SUCH SIZE THAT AN AVERAGE PERSON CAN PLACE HIS HAND INSIDE AND PERFORM NORMAL WIRE TERMINATION OPERATIONS. THE COVER SHALL BE THE SAME COLOR AND TEXTURE AS THE POLE.

BRACKET ARM:

BRACKET ARM OF DESIGNATED LENGTH SHALL BE PROVIDED WITH THE POLE.

LOADING TEST:

THE MANUFACTURER SHALL PROVIDE SHOP DRAWINGS FOR THE POLE AND CERTIFIED TEST DATA FOR DEFLECTION AND ULTIMATE STRENGTH.

ALL TESTING IS TO BE PERFORMED ON THE POLE WITH THE APPROPRIATE SIZE HAND HOLE LOCATED ON THE COMPRESSION SIDE.

1. A HORIZONTAL LOAD IS TO BE APPLIED IN 100 POUND INCREMENTS AT A POINT 12" FROM THE TOP UNTIL AN ULTIMATE GROUND LINE MOMENT OF 18,000 FOOT POUNDS HAS BEEN APPLIED. THIS 18,000 FOOT–POUND LOAD IS TO BE HELD FOR FIVE (5) MINUTES WITHOUT POLE FAILURE AND THE POLE IS TO HAVE NO MORE THAN 1% PERMANENT DEFLECTION AFTER UNLOADING.

   UNDER THE SAME TEST PROCEDURE, THE MAXIMUM DEFLECTION UNDER 100 POUND LOADING SHALL BE 4% OF THE ABOVE GRADE LENGTH OF THE POLE.

2. A HORIZONTAL LOAD IS TO BE APPLIED IN 100 POUND INCREMENTS AT A POINT OF 12" FROM THE TOP OF THE POLE. THE LOAD IS TO BE HELD FOR FIVE (5) MINUTES WITHOUT POLE FAILURE AND THE POLE IS TO HAVE NO MORE THAN 1% PERMANENT DEFLECTION AFTER UNLOADING.

	MAX. DEFLECTION UNDER LOAD (IN.) 100#	300#	500#	MIN. BREAKING STRENGTH (#)
35' POLE				
14.5" B.C.	7	20	33	650

SHIPPING:

EACH POLE SHALL BE INDIVIDUALLY WRAPPED FOR PROTECTION DURING SHIPPING AND STORAGE.

PAYMENT:

PAYMENT SHALL BE MADE AT THE UNIT PRICE BID FOR EACH ITEM 625 – "LIGHT POLE MISC.: DESIGN A10B35, FIBERGLASS, AS PER PLAN" OR FOR EACH ITEM 625 – "LIGHT POLE MISC.: DESIGN A6B35, FIBERGLASS".

LIGHT POLE, MISC.: FIBERGLASS
(ALTERNATE BID, SHAKESPEARE BRAND)

THIS ITEM IS FOR PROVIDING AND INSTALLING SHAKESPEARE CATALOG NUMBER AH35 – 995CB0101, IN LIEU OF THE GENERIC POLE DESCRIBED IN ITEM 625 – – "LIGHT POLE, MISC.: DESIGN A10B35, FIBERGLASS" OR IN ITEM 625 – "LIGHT POLE, MISC.: DESIGN A6B35, FIBERGLASS".

PAYMENT SHALL BE MADE AT THE UNIT PRICE BID FOR EACH ITEM 625 – "LIGHT POLE, MISC.: DESIGN A10B35, SHAKESPEARE NUMBER AH35 – 995CB0101, FIBERGLASS" OR ITEM 625 – "LIGHT POLE, MISC.: DESIGN A6B35, SHAKESPEARE NUMBER AH35 – 995CB0101, FIBERGLASS" SHALL INCLUDE ALL LABOR, EQUIPMENT, MATERIALS AND INCIDENTALS NECESSARY TO INSTALL LIGHT POLE.

ITEM 625 – PULL BOX, MISC.: POLYMER 30"x18"x24" DEEP

MATERIALS USED IN THE MANUFACTURE OF POLYMER CONCRETE PULL BOXES AND PULL BOX COVERS SHALL CONSIST OF POLYESTER RESIN MIXED WITH QUARTZ AGGREGATE FILLER. MATERIAL SHALL BE CHEMICALLY RESISTANT TO 50% SULFURIC ACID, SODIUM CHLORIDE, MOTOR OILS, GASOLINE AND ROAD SALTS. FINISHED PRODUCTS SHALL MEET H–20 LOADING AND HAVE A COMPRESSIVE STRENGTH OF 12,500 PSI MINIMUM.

PULL BOXES AND PULL BOX COVERS SHALL BE COMPLETELY INTERCHANGEABLE WITH THE STANDARD CLEVELAND PUBLIC POWER (CPP) STREET LIGHTING PULL BOX AS MANUFACTURED BY:

ACO POLYMER PRODUCTS
12080 RAVENNA ROAD
CHARDON, OHIO 44024

OR

ASSOCIATED PLASTICS
18140 EUCLID STREET
FOUNTAIN VALLEY, CA 92708

OR

APPROVED EQUAL

HIGH–PRESSURE SODIUM LAMPS

HIGH–PRESSURE SODIUM LAMPS SHALL BE GENERAL ELECTRIC "LUCALOX" SYLVANIA "LUMALUX", WESTINGHOUSE "CERAMALUX", OR EQUAL APPROVED BY THE ENGINEER AND SHALL CONFORM TO SECTION 713.14 OF THE SPECIFICATIONS.

ITEM 202 – ELECTRICAL EQUIPMENT REMOVED

ALL ITEMS WHICH ARE LISTED AS REMOVED OR REPLACED BY THIS PLAN SHALL BECOME THE PROPERTY OF THE CONTRACTOR UNLESS OTHERWISE NOTED FOR SALVAGE. ALL ITEMS NOT SPECIFICALLY CALLED FOR AS A REMOVAL ITEM SUCH AS WIRE, INSULATORS, BRACKETS, BRACING, ETC., SHALL BE CONSIDERED AS AN INCIDENTAL ITEM, THE FOLLOWING ITEMS SHALL BE REMOVED IN ACCORDANCE WITH THE PROVISIONS OF SECTION 202 OF THE SPECIFICATION:

ITEM	DESCRIPTION
202	LIGHT POLE REMOVED
202	REMOVAL MISC.: WOOD LIGHT POLE REMOVED FOR STORAGE
202	LUMINAIRE REMOVED FOR STORAGE

SALVAGED ITEMS:
THE CONTRACTOR SHALL CAREFULLY REMOVE FOR STORAGE TO A POINT WITHIN THE PROJECT LIMITS DESIGNATED BY THE ENGINEER TO BE SALVAGED BY THE CITY OF CLEVELAND.

CONDUIT ON STRUCTURE

EXPANSION FITTINGS FOR CONDUIT ON STRUCTURES SHALL BE OZ TYPE AX–4, CROUSE–HINDS TYPE XJ–4, APPLETON TYPE XJ–4, OR EQUAL APPROVED BY THE ENGINEER. EACH EXPANSION FITTING SHALL HAVE A COPPER BONDING JUMPER.

STRUCTURE GROUNDING SYSTEM, AS PER PLAN

THIS ITEM SHALL INCLUDE GROUNDING OF THE ORNAMENTAL RAILING AND VANDAL PROTECTIVE FENCE ON THE BRIDGE SUPERSTRUCTURE AS DETAILED ON SHEET 29. EACH RUN (BOTH SIDES OF BRIDGE) OF VANDAL PROTECTIVE FENCE SHALL BE GROUNDED AT (3) LOCATIONS. EACH RUN (BOTH SIDES OF BRIDGE) OF ORNAMENTAL RAILING SHALL BE GROUNDED AT THREE (3) LOCATIONS, AS SHOWN ON SHEET 30.
THIS ITEM ALSO INCLUDES THE GROUNDING OF THE STRUCTURE MOUNTED LIGHTING AS DETAILED IN STANDARD DRAWING HL–50.21. PAYMENT FOR ALL LABOR, EQUIPMENT, AND MATERIALS SHALL BE INCLUDED IN THE COST BID FOR ITEM 625 – STRUCTURE GROUNDING SYSTEM, AS PER PLAN.

ITEM 625 – CONDUIT 713.07, TYPE EB, AS PER PLAN

CONDUIT AND FITTINGS SHALL BE POLYVINYL CHLORIDE CONDUIT, TYPE EB 20 OR EQUAL AS PER 713.07 OF CMS. CONDUIT SHALL BE ENCASED WITH A MINIMUM OF A 3 INCH ENVELOPE OF CLASS C CONCRETE (CMS 499). LABOR AND MATERIAL FOR PROVIDING CONCRETE ENCASEMENT SHALL BE INCLUDED IN THE UNIT PRICE BID FOR ITEM 625 – CONDUIT 713.07, TYPE EB, AS PER PLAN. ALL OTHER PORTIONS OF CMS SECTION 625 SHALL APPLY.

ACESS OPENING FOR LIGHT POLE IN VANDAL PROTECTION FENCE

THE ACCESS OPENING IN THE VANDAL PROTECTION FENCE FOR LIGHT POLES, SHOWN ON STANDARD CONSTRUCTION DRAWING VPF–1–90M (SHEET NUMBER 5/7), IS NOT TO BE USED ON THIS PROJECT. ALL WIRING CONNECTIONS FOR THE PROPOSED LIGHT POLES SHALL BE MADE IN THE STRUCTURE JUNCTION BOXES.

Stokes 0031 (4:021) SFN: 1833936

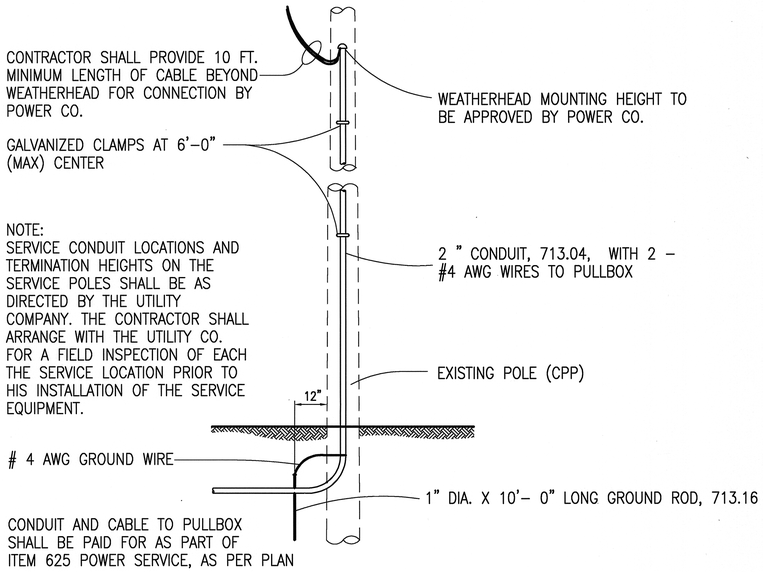

POWER SERVICE, AS PER PLAN

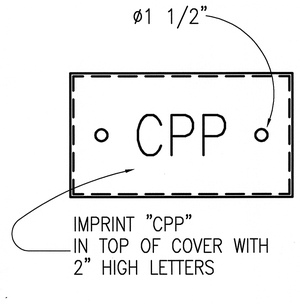

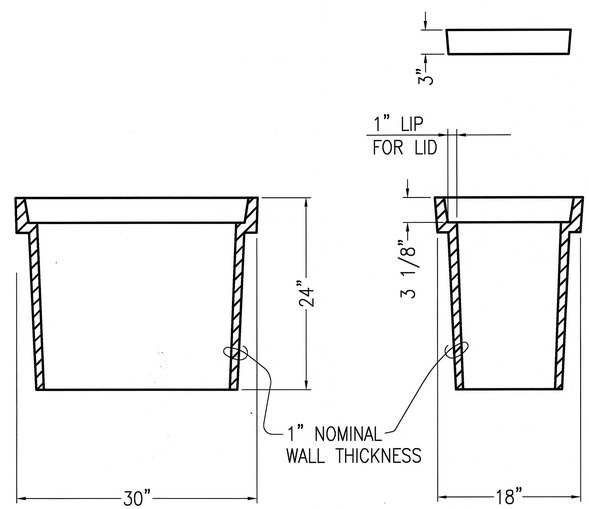

PULLBOX, MISC: POLYMER 30"x18"x24" DEEP

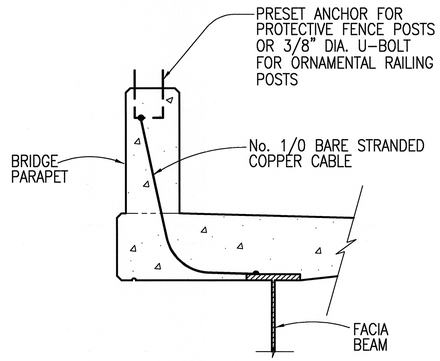

STRUCTURE GROUNDING SYSTEM, AS PER PLAN

FOR ADDITIONAL DETAILS AND NOTES, SEE STD. DWG. HL–50.21

Stokes 0031 (4:02:021) SFN: 1833936

CALC. BY V.S. DATE 10/93	CUYAHOGA COUNTY	OHIO	30
CHKD. BY T.H. DATE 10/93	CUY–FAIRHILL ROAD	FHWA REGION 5	58

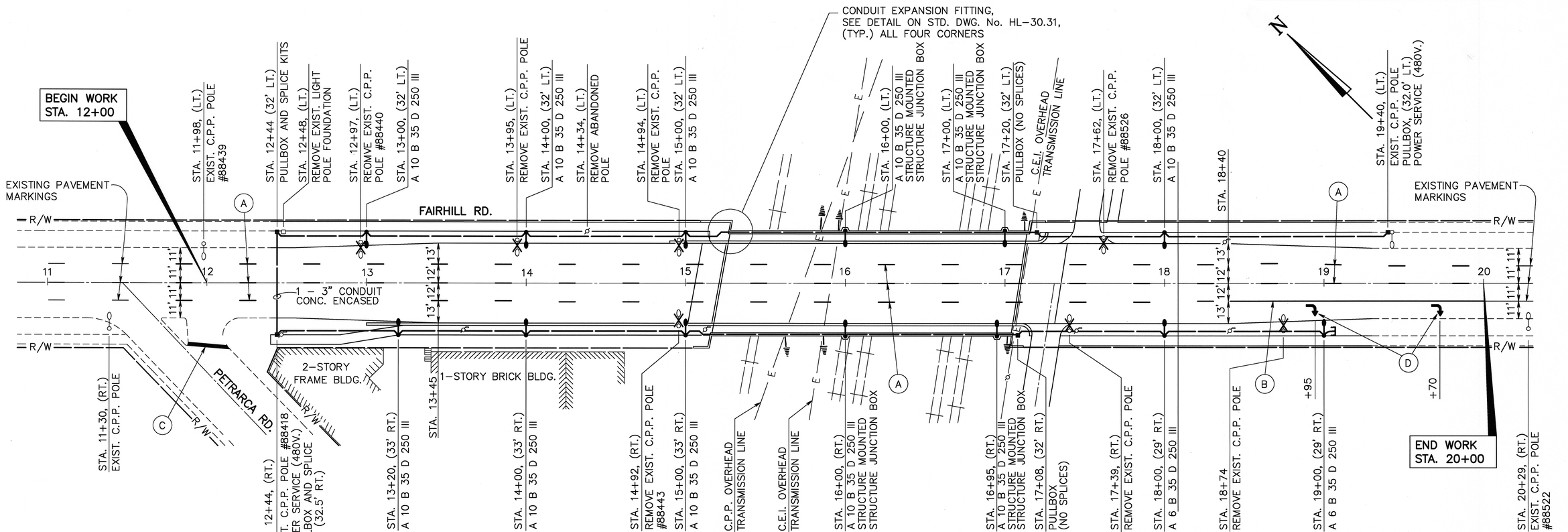

LIGHTING SUB–SUMMARY

			202				603							625												
SIDE	FROM (STATION)	TO (STATION)	LIGHT POLE REMOVED	LIGHT POLE FOUNDATION REMOVED	LUMINAIRE REMOVED FOR STORAGE	REMOVAL MISC.: WOOD LIGHT POLE REMOVED FOR STORAGE	4" CONDUIT, TYPE E	CONNECTOR KIT, TYPE II	CONNECTOR KIT, TYPE III	CABLE SPLICING KIT	LIGHT POLE, MISC: DESIGN A 10 B 35, FIBERGLASS	LIGHT POLE, MISC: DESIGN A 6 B 35, FIBERGLASS	LIGHT POLE ANCHOR U–BOLTS	No. 4 AWG 5000 VOLT DISTRIBUTION CABLE	No. 10 AWG POLE AND BRACKET CABLE	CONDUIT, 2", 713.04	CONDUIT, 2", 713.07 TYPE EB, AS PER PLAN	CONDUIT, 3", 713.07, TYPE EB, AS PER PLAN	LUMINAIRE, STYLE B, TYPE III, 250 WATT HIGH PRESSURE SODIUM, 713.11, 480 VOLT WITH PHOTOCELL	TRENCH 24" DEEP	STRUCTURE JUNCTION BOX	PULLBOX, MISC.: POLYMER	GROUND ROD	STRUCTURE GROUNDING SYSTEM, AS PER PLAN	POWER SERVICE, AS PER PLAN	LIGHT POLE FOUNDATION 24" x 8' DEEP
			EA.	EA.	EA.	EA.	L.F.	EA.	EA.	EA.	EA.	EA.	EA.	L.F.	L.F.	L.F.	L.F.	L.F.	EA.	L.F.	EA.	EA.	EA.	EA.	EA.	EA.
L/R	12+44													160				70		70					1	
L	12+44	13+00		1	1	1	20	1	1	2	1			140	100		56		1	60		1	1			1
L	13+00	14+00			1	1		1	1		1			220	100		100		1	100			1			1
L	14+00	15+00	1		1	1		1	1		1			220	100		100		1	100			1			1
L	15+00	16+00						1	1		1		2	240	100	100			1	30	1			1		
L	16+00	17+00						1	1		1		2	220	100	100			1		1					
L	17+00	17+20														20										
L	17+20	18+00			1	1	20	1	1		1			240	100		80		1	90		1	1			1
L	18+00	19+40												300			140			140		1			1	
R	12+44	13+20					20	1	1	2	1			180	100		76		1	80		1	1			1
R	13+20	14+00						1	1		1			220	100		80		1	100			1			1
R	14+00	15+00			1	1		1	1		1			220	100		100		1	100			1			1
R	15+00	16+00						1	1		1		2	240	100	100			1	20	1					
R	16+00	16+95						1	1		1		2	210	100	95			1		1					
R	16+95	17+08			1	1	20	1	1			1		250	92	13			1	100		1	1			1
	17+08	18+00															92									
R	18+00	19+00			1	1		1	1			1		220	92		100		1	100			1			1
TOTAL			1	1	7	7	80	13	13	4	11	2	8	3280	1284	428	924	70	13	1090	4	5	9	1	2	9

LIGHTING LEGEND

- PULL BOX
- 1 – 2" CPP LIGHTING CONDUIT (EXCEPT WHERE NOTED)
- EXISTING POWER POLE
- EXISTING WOOD LIGHT POLE
- EXISTING WOOD LIGHT POLE TO BE REMOVED
- ABANDONED LIGHT POLE TO BE REMOVED
- ABANDONED LIGHT POLE FOUNDATION TO BE REMOVED
- E—— CONDUIT STUB AND CAP
- FENCE GROUND
- STA. 16+00 (LT) (STATION LOCATION)

A 10 B 35 D 250 III (POLE AND LUMINARE DESCRIPTION)

- IES DISTRIBUTION TYPE
- LAMP WATTAGE
- LETTER "D" INDICATES SPECIAL FEATURE
- LUMINAIRE MOUNTING HEIGHT (FT.)
- BRACKET (B–SINGLE BB–DOUBLE)
- BRACKET ARM LENGTH (FT.)
- BASE (ST–STEEL TRANSFORMER, AT–ALUMINUM TRANSFORMER, A–ANCHOR BASE)

PAVEMENT MARKING LEGEND

- (A) LANE LINES
- (B) CHANNELIZING LINES
- (C) STOP LINES
- (D) LANE ARROWS

PAVEMENT MARKING QUANTITIES

SIDE	STATION	STATION	642 LANE LINE, TYPE 2	STOP LINE	642 CHANNELIZING LINE	LANE ARROW
			L.F.	L.F.	L.F.	EA.
LT.& RT.	12+00	20+00	2240	30	160	2
		MILES	0.42			

LIGHTING AND PAVEMENT MARKING PLAN

SFN: 1833936
Stokes 0031 (4:021)

CALC. BY ____ DATE ____	CUYAHOGA COUNTY CUY–FAIRHILL RD.	OHIO
CHKD. BY ____ DATE ____		FHWA REGION 5

30A 58

C.P.P. GENERAL NOTES

SCOPE OF WORK:

THE CONTRACTOR SHALL RELOCATE THE EXISTING UNDERGROUND C.P.P. FACILITIES AS INDICATED ON THE PLANS OR AS DIRECTED BY THE ENGINEER. THE WORK SHALL BE PROPERLY COMPLETED, INCLUDING "INCIDENTALS", AS SHOWN IN THE DRAWINGS AND HEREINAFTER SPECIFIED.

MAJOR ITEMS OF WORK SHALL INCLUDE PROVISION OF A NEW MANHOLE AT EACH END OF THE NEW BRIDGE; INSTALLATION OF SIX FIVE (5) INCH CONDUITS BETWEEN THE MANHOLES PASSING THROUGH THE ABUTMENTS AND SUPPORTED ON THE NEW SUPERSTRUCTURE; AND INSTALLATION OF UNDERGROUND CONCRETE ENCASED DUCT FROM THE NEW MANHOLES TO THE EXISTING MANHOLES AT EACH END OF THE BRIDGE.

THE CONTRACTOR SHALL MAINTAIN EXISTING C.P.P. SERVICE DURING STAGE I CONSTRUCTION UTILIZING EXISTING C.P.P. FACILITIES.

REMOVAL OF THE EXISTING SERVICE CONNECTION ACCROSS THE BRIDGE AND INSTALLATION OF THE NEW SERVICE CONNECTION SHALL BE THE RESPONSIBILITY OF C.P.P.. THE CONTRACTOR SHALL COOPERATE WITH C.P.P. IN MAKING THE TRANSITION.

SPECIFICATIONS:

ALL WORK IN THIS CONTRACT SHALL CONFORM TO THE LATEST STATE OF OHIO DEPARTMENT OF TRANSPORTATION CONSTRUCTION AND MATERIAL SPECIFICATIONS, NATIONAL ELECTRIC SAFETY CODE, OSHA, OR LOCAL REGULATIONS THAT ARE MORE STRINGENT, EXCEPT AS DELINEATED IN THE PLANS.

LAYING CONDUIT:

A. PROPER IMPLEMENTS, TOOLS AND FACILITIES, SATISFACTORY TO THE PROJECT ENGINEER SHALL BE PROVIDED AND USED BY THE CONTRACTOR FOR THE SAFE AND CONVENIENT PROSECUTION OF THE WORK. ALL CONDUITS AND FITTINGS SHALL BE CAREFULLY LOWERED INTO THE TRENCH PIECE BY PIECE, IN SUCH A MANNER AS TO PREVENT DAMAGE TO CONDUIT, AND UNDER NO CIRCUMSTANCES SHALL CONDUIT OR ACCESSORIES BE DROPPED OR DUMPED INTO THE TRENCH. IF ANY DEFECTIVE CONDUIT OR MATERIAL SHOULD BE DISCOVERED WHILE CONDUIT IS BEING LAID, A NEW PIECE SHALL BE FURNISHED AND INSTALLED BY THE CONTRACTOR AT THE SITE OF THE WORK.

B. ALL FOREIGN MATTER OR DIRT SHALL BE REMOVED FROM THE INSIDE OF THE CONDUIT BEFORE IT IS LOWERED INTO ITS POSITION IN THE TRENCH, AND IT SHALL BE KEPT CLEAN BY APPROVED MEANS DURING AND AFTER LAYING.

C. WHENEVER NECESSARY TO DEFLECT CONDUIT FROM A STRAIGHT LINE, EITHER IN THE VERTICAL OR HORIZONTAL PLANE TO AVOID OBSTRUCTIONS, OR FOR OTHER REASONS, THE DEGREE OF DEFLECTION SHALL BE APPROVED BY THE PROJECT ENGINEER.

FLOATING:

THE CONTRACTOR SHALL TAKE EVERY PRECAUTION AGAINST THE FLOATING OF THE CONCRETE ENCASED CONDUIT LINE DUE TO WATER COMING INTO THE TRENCH, OR THROUGH CAVING IN, FLUSHING OR PUDDLING. IN CASE OF SUCH FLOATING THE CONTRACTOR SHALL REPLACE THE CONCRETE ENCASED CONDUIT LINE AT HIS OWN EXPENSE, AND MAKE WHOLLY GOOD ANY INJURY OR DAMAGE WHICH MAY HAVE RESULTED.

INSPECTION:

INSPECTIONS CONDUCTED SHALL NOT RELIEVE THE CONTRACTOR FROM ANY OBLIGATION TO PERFORM SAID WORK STRICTLY IN ACCORDANCE WITH THE SPECIFICATIONS, OR ANY MODIFICATIONS THEREOF AS HEREIN PROVIDED, AND WORK NOT SO CONSTRUCTED SHALL BE REMOVED AND MADE GOOD BY THE CONTRACTOR AT HIS OWN EXPENSE. ALL MATERIAL MUST BE SOUND AND SHALL CONFORM TO THESE SPECIFICATIONS, AND ANY DEFECTIVE MATERIAL WHICH MAY HAVE PASSED THE INSPECTOR AT THE WORKS, OR ELSEWHERE, SHALL BE AT ALL TIMES LIABLE TO REJECTION WHEN DISCOVERED UNTIL THE DATE OF FINAL PAYMENT UNDER THIS CONTRACT.

PLAIN AND REINFORCED CONCRETE MASONRY:

THE MATERIAL FURNISHED BY THE CONTRACTOR FOR THE VARIOUS KINDS OF PLAIN AND REINFORCED MASONRY CONSTRUCTION TO BE PERFORMED SHALL CONFORM TO 602.

ITEM 625 – LIGHTING, MISC.: REINFORCED CONCRETE MANHOLE

A. WORK INCLUDED

THE CONTRACTOR SHALL FURNISH ALL MATERIALS FOR AND SHALL PROPERLY CONSTRUCT AT THE LOCATIONS, TO THE LINE AND GRADE AND TO THE DIMENSIONS AND DETAILS AS SHOWN ON THE PLANS AND IN ACCORDANCE TO THESE SPECIFICATIONS, ALL MANHOLES COMPLETE WITH BRICK NECKS, FRAMES, COVERS, CABLE PULLING IRONS, GROUNDING RODS, RACKS AND SUMPS AS SHOWN ON THE PLANS.

B. CONCRETE

CONCRETE SHALL CONFORM TO 511.

C. REINFORCING STEEL

REINFORCING STEEL SHALL CONFORM TO 509 MODIFIED TO 709.01.

D. MANHOLE FRAMES AND COVERS

1. ALL CAST IRON MANHOLE FRAMES AND COVERS AS SHOWN ON THE DRAWING SHALL BE FURNISHED AND INSTALLED AS DIRECTED. FRAMES SHALL BE SET IN PLACE IN A FULL BED OF MORTAR, AT SUCH ELEVATIONS AS TO MAKE THE TOP OF THE FRAME CONFORM TO THE FINISHED SURFACES OR FINAL ESTABLISHED GRADE. BRICK MASONRY MAY BE USED ABOVE THE TOP OF THE MANHOLE FOR SETTING THE FRAME TO GRADE. MANHOLE FRAMES AND COVERS SHALL BE MACHINED SO THAT IT WILL BE IMPOSSIBLE TO ROCK THE COVER AFTER IT HAS BEEN SEATED IN THE PROPER POSITION IN THE FRAME.

2. ALL CASTINGS SHALL CONFORM TO 711.12 CLASS 30B.

3. ALL CASTINGS SHALL BE THOROUGHLY CLEANED AND SUBJECTED TO A CAREFUL HAMMER TEST. NO CASTINGS SHALL BE COATED UNLESS CLEAN AND FREE FROM RUST AND APPROVED IN THESE RESPECTS BY THE DIRECTOR OR HIS AUTHORIZED INSPECTOR IMMEDIATELY BEFORE BEING DIPPED.

4. EACH CASTING SHALL BE SPRAYED OR BRUSHED INSIDE AND OUT WITH ONE COAT OF ASPHALTIC COMPOUND VARNISH. THE VARNISH SHALL BE MADE OF HIGH GRADE ASPHALT FLUXED AND BLENDED WITH PROPERLY TREATED FRYING OILS AND THINNED TO A PROPER CONSISTENCY WITH A VOLATILE SOLVENT. THE VARNISH SHALL BE APPROVED AND SIMILAR TO BLACK ASPHALT VARNISH. OTHER METHODS OF COATING AND TYPES OF COATING MATERIALS SHALL BE SUBJECT TO THE APPROVAL OF THE ENGINEER. IN ADDITION TO THE SHOP COAT THE COATINGS SHALL RECEIVE TWO (2) COATS OF APPROVED PAINT.

E. CABLE PULLING IRONS:

CABLE PULLING IRONS SHALL BE MADE FROM 7/8 INCH ROUND STEEL ROD SHAPED AS SHOWN ON THE DRAWINGS AND TIED INTO THE REINFORCING STEEL BEFORE CONCRETE IS POURED. PULLING IRONS SHALL BE HOT–DIP GALVANIZED AFTER FORMING.

F. GROUND ROD

THE GROUND ROD SHALL BE 1/2" x 8'–0" COPPER WELD GROUND ROD AND GROUND ROD WIRE SHALL BE #2 BARE STRANDED.

G. CABLE RACKS

CABLE RACKS SHALL CONSIST OF:

RACK	McGRAW–EDISON #DU1B7 HUBBARD #2290 OR APPROVED EQUAL
HOOK	McGRAW–EDISON #DU1S3 HUBBARD #2262 OR APPROVED EQUAL
INSULATOR	McGRAW–EDISON #DE3U1 HUBBARD #2123 OR APPROVED EQUAL

RACKS AND SUPPORTS SHALL BE HOT–DIP GALVANIZED.

H. CLEANING MANHOLES

UPON COMPLETION OF THE MANHOLES AND BEFORE ACCEPTANCE AND FINAL PAYMENT SHALL BE MADE, THE CONTRACTOR SHALL REMOVE ALL DIRT, SAND, MUD, RUBBISH, DEBRIS, EXCESS MATERIALS, FALSEWORK, TEMPORARY STRUCTURES AND EQUIPMENT OUT OF THE MANHOLES AND ALL PART OF THE WORK SHALL BE LEFT IN A NEAT AND PRESENTABLE CONDITION SATISFACTORY TO THE PROJECT ENGINEER.

I. MEASUREMENT

THE MANHOLES TO BE PAID FOR WILL BE THE ACTUAL NUMBER COMPLETED AND ACCEPTED, INCLUDING GROUND RODS, CLAMP, GROUND WIRE, CABLE SUPPORTS AND COVER.

J. PAYMENT

THE WORK INCLUDED IN THIS ITEM AND THE CONTRACT UNIT PRICE BID FOR EACH MANHOLE BID UNDER THIS ITEM IN PLACE, COMPLETED AND ACCEPTED, SHALL FORM THE BASIS OF PAYMENT AND SHALL CONSTITUTE FULL COMPENSATION FOR ALL EXCAVATION AND BACKFILL FOR FURNISHING, HAULING AND PLACING ALL CASTINGS, TIEING EXISTING OR NEW DUCTS INTO MANHOLES INCLUDING RAISING OR LOWERING DUCTS, REINFORCING STEEL, CONCRETE BRICK AND CONCRETE MASONRY, PULLING IRONS, GROUND RODS AND OTHER MATERIAL, ETC., AND FOR ALL LABOR, EQUIPMENT, TOOLS AND INCIDENTALS NECESSARY TO COMPLETE THIS ITEM. THESE ITEMS AS PROVIDED ABOVE WILL BE PAID FOR UNDER:

ITEM	UNIT	DESCRIPTION
625	EACH	LIGHTING, MISC.;, REINFORCED CONCRETE MANHOLE

ITEM 625 – LIGHTING, MISC.: CONCRETE ENCASED CONDUIT BANKS

A. WORK INCLUDED

THE CONTRACTOR SHALL FURNISH ALL MATERIALS FOR AND SHALL PROPERLY CONSTRUCT AND CONNECT TO MANHOLES AND TO PULL BOXES AS SHOWN ON THE DRAWINGS OR AS DIRECTED ALL CONCRETE ENCASED PVC CONDUIT BANKS AS REQUIRED FOR THE PROPER COMPLETION OF THE WORK INCLUDED UNDER THIS CONTRACT.

B. CONDUIT AND FITTINGS

CONDUITS AND FITTINGS SHALL BE PLASTIC PVC, POLYVINYL CHLORIDE POWER AND COMMUNICATIONS DUCT. CONCRETE BLOCK SPACERS WILL NOT BE ACCEPTED.

C. PLASTIC PVC CONDUIT SHALL BE UL LABELED AND LISTED AND CONFORM TO LATEST REVISION OF UNDERWRITERS LABORATORIES 651 STANDARDS AND SHALL BE TYPE EB, ENCASED BURIAL WITH CONCRETE ENCASEMENT, NECESSARY COUPLINGS, ADAPTERS, EXPANSIONS, END BELLS, AND SWEEPS SOLVENT WELDED TOGETHER TO FORM A WATERTIGHT CONDUIT RUN. END BELLS, COUPLINGS AND EXPANSION FITTINGS AND THE SOLVENT WELD CEMENT SHALL BE PRODUCED BY THE SAME MANUFACTURER.

D. POLYVINYL CHLORIDE, PVC, CONDUIT FOR ELECTRICAL PURPOSES SHALL CONFORM TO UL 651 STANDARDS AND SHALL BE FIVE (5) INCHES INSIDE DIAMETER TYPE EB WITH CONCRETE ENCASEMENTS AS DETAILED ON CONTRACT DRAWINGS. COUPLINGS SHALL BE SOCKET TYPE.' END BELLS AT MANHOLE ENTRANCE, 5 DEGREES ANGLE COUPLINGS, STANDARD COUPLINGS, VARIOUS DEGREE SWEEPS, 11–1/2 DEGREES TO 90 DEGREES, INCLUDING FIELD BENDS AND PLUGS OR CAPS TO CLOSE UNUSED CONDUITS SHALL BE MADE OF THE SAME MATERIAL AS THE CONDUIT. CONDUIT SPACERS MAY BE MADE OF PLASTIC, STYRENE OR POLYVINYL CHLORIDE OR POLYETHYLENE.

E. CONCRETE

CONCRETE USED FOR ENCASEMENT OF CONDUITS SHALL CONFORM TO STATE OF OHIO, DEPARTMENT OF TRANSPORTATION, CONSTRUCTION AND MATERIAL SPECIFICATIONS ITEM 499 CLASS C, USING NO. 8 SIZE AGGREGATE.

Stokes 0031 (4:021) SFN: 1833936

CALC. BY		CUYAHOGA COUNTY	OHIO
DATE		CUY–FAIRHILL RD.	FHWA REGION 5
CHKD. BY			
DATE			

30B 58

C.P.P. GENERAL NOTES

ITEM 625 – LIGHTING, MISC.: CONCRETE ENCASED CONDUIT BANKS

F. INSTALLATION

1. CONDUIT SHALL BE INSTALLED BY THE BUILT UP METHOD WITH JOINTS IN ADJACENT DUCTS STAGGERED. NECESSARY SPACERS SHALL BE PLACED AT NOT GREATER THAN FIVE (5) FOOT INTERVALS TO HOLD DUCTS IN THE CONFIGURATION DESIRED, WITH THE DUCT BANK BRACED SECURELY TO KEEP FROM SHIFTING AND FLOATING WHILE CONCRETE IS POURED. EACH SECTION OF CONDUIT SHALL HAVE AN APPLICATION OF A JOINT SEALER COMPOUND FURNISHED BY THE CONDUIT MANUFACTURER AND BE TAPPED SECURELY INTO PLACE IN THE PREVIOUS COUPLING TO SET UP THE JOINTS TIGHT AND LEAKPROOF.
2. CONCRETE SHALL BE WORKED INTO THE SPACES BETWEEN DUCTS SO THAT THE CONDUIT BANK IS EFFECTIVELY ENCASED IN CONCRETE WITHOUT VOIDS OR EMPTY SPACES. REINFORCING RODS SHALL BE INSTALLED AS SHOWN ON THE DRAWINGS.
3. CONDUIT WHICH IS CUT TO FIT SHORT SECTIONS SHALL BE DEBURRED ON THE DUCT END AND THE END OF THE BELL REAMED IN THE INSIDE DIAMETER FOR EACH ENTRY OF THE DUCT INTO THE COUPLING TO PRODUCE THE SAME JOINTING CONDITIONS AS PROVIDED BY FACTORY MADE CONDUIT SECTIONS.
4. THE END BELLS SHALL BE INSTALLED WITH THE EDGE OF THE FLARED ENDS FLUSH WITH THE INSIDE WALLS OF THE MANHOLES.
5. ALL END BELLS SHALL BE GROUTED IN PLACE.

G. DUCT CLEANING

AFTER CONDUITS HAVE BEEN INSTALLED THE CONTRACTOR SHALL CLEAN ALL THE DUCTS BY PULLING THROUGH A MANDREL TO REMOVE SOLID OBSTRUCTIONS, FOLLOWED BY A CIRCULAR WIRE BRUSH TO REMOVE ANY DIRT, SAND OR CONCRETE WHICH MAY HAVE BEEN INTRODUCED DURING CONSTRUCTION, LEAVING A CLEAN CONDUIT FREE FROM OBSTRUCTIONS OR FOREIGN MATTER.

H. MEASUREMENT

THE NUMBER OF LINEAR FEET OF CONDUIT BANK TO BE PAID FOR SHALL BE THE ACTUAL NUMBER OF LINEAR FEET FURNISHED AND PLACED AND CLEANED IN ACCORDANCE WITH THESE SPECIFICATIONS AS MEASURED ALONG THE AXIS OF THE CONDUIT LINE INCLUDING FITTINGS.

I. PAYMENT

THE FOOTAGE MEASURED AS PROVIDED ABOVE SHALL BE PAID FOR AT THE CONTRACT UNIT PRICE BID PER LINEAR UNDER "ITEM 625 – LIGHTING, MISC.: CONCRETE ENCASED CONDUIT BANKS" CLASSIFIED AS TO SIZE AND TYPE, WHICH PRICE AND PAYMENT SHALL CONSTITUTE FULL COMPENSATION FOR EXCAVATING AND FOR FURNISHING, HAULING, PLACING THE CONDUIT FITTINGS, CAPPING SPACERS, CONCRETE, SHEETING AND BRACING, BACKFILL, WATER USED FOR COMPACTION, INCIDENTAL CONCRETE, DUCT CLEANING, THE REMOVAL OF ALL SURPLUS EXCAVATION AND DISCARDED MATERIAL, REPAVING SEEDING AND FOR ALL LABOR, EQUIPMENT, TOOLS AND INCIDENTALS NECESSARY TO COMPLETE THIS ITEM.

THIS ITEM AS MEASURED AND PROVIDED ABOVE WILL BE PAID FOR UNDER:

ITEM	UNIT	DESCRIPTION
625	LIN. FT.	LIGHTING, MISC.: CONCRETE ENCASED CONDUIT BANKS

ITEM 625 – LIGHTING, MISC.: NON–ENCASED, BRIDGE–SUPPORTED 5–INCH FIBERGLASS REINFORCED CONDUIT BANK

WORK INCLUDED

THE CONTRACTOR SHALL FURNISH ALL MATERIALS FOR AND SHALL PROPERLY INSTALL AND CONNECT TO EXPANSION COUPLINGS LOCATED AT APPROXIMATELY, THE MID POINT OF THE BRIDGE OR AS DIRECTED, ALL NON–ENCASED, BRIDGE–SUPPORTED FIBERGLASS REINFORCED CONDUIT AS REQUIRED FOR THE PROPER COMPLETION OF THE WORK INCLUDED UNDER THIS CONTRACT.

FIBERGLASS REINFORCED EPOXY CONDUIT AND FITTINGS

CONDUIT SHALL BE COMPOSED OF GLASS FILAMENTS ENCAPSULATED IN AN EPOXY MATRIX. THE CONDUIT AND FITTINGS SHALL BE FILAMENT WOUND. THE GLASS FIBER CONTENT SHALL NOT BE LESS THAN 60% BY WEIGHT OF THE REINFORCED WALL THICKNESS. CONDUIT AND FITTINGS SHALL BE UL LISTED.

EACH CONDUIT LENGTH SHALL HAVE AN INTEGRAL WOUND IN EXPANDED COUPLING INCORPORATING AN INTEGRAL URETHANE GASKET FOR SEALING. NO THREADS OR ADHESIVES SHALL BE REQUIRED TO ASSURE WATERTIGHT JOINTS. ALL CONDUIT AND FITTINGS WILL BE PIGMENTED WITH CARBON BLACK DISPERSED HOMOGENEOUSLY THROUGHOUT THE EPOXY GLASS MATRIX FOR U.V. PROTECTION.

GALVANIZED STEEL CONDUIT AND FITTINGS

CONDUIT SHALL COMPLY WITH REQUIREMENTS OF SECTION 713.04 OF THE O.D.O.T. CMS.

APPROPRIATE, FEMALE THREADED, ADAPTORS SHALL BE PROVIDED AT EACH END OF THE GALVANIZED STEEL CONDUIT, TO TRANSITION FROM FIBERGLASS REINFORCED EPOXY CONDUIT ON THE STRUCTURE TO P.V.C. CONDUIT OFF THE STRUCTURE.

MEASUREMENT

THE NUMBER OF LINEAR FEET OF CONDUIT BANK (6 – 5" CONDUITS) TO BE PAID FOR SHALL BE THE ACTUAL NUMBER OF LINEAR FEET FURNISHED AND PLACED IN ACCORDANCE WITH THESE SPECIFICATIONS AS MEASURED ALONG THE AXIS OF THE CONDUIT LINE INCLUDING FITTINGS.

PAYMENT

THE FOOTAGE MEASURED AS PROVIDED ABOVE SHALL BE PAID FOR AT THE CONTRACT PRICE BID PER LINEAL FOOT FOR "ITEM 625 – LIGHTING, MISC.: NON–ENCASED, BRIDGE SUPPORTED 5–INCH FIBERGLASS REINFORCED CONDUIT BANK WHICH PRICE AND PAYMENT SHALL CONSTITUTE FULL COMPENSATION FOR FURNISHING, HAULING AND PLACING THE CONDUIT, FITTINGS SPACERS, SUPPORT BRACKETS, PROTECTIVE HOOD, AND FOR ALL LABOR, EQUIPMENT, TOOLS AND INCIDENTALS NECESSARY TO COMPLETE THIS ITEM. THE ITEMS AS MEASURED AND PROVIDED ABOVE WILL BE PAID FOR UNDER:

ITEM	UNIT	DESCRIPTION
625	LIN. FT.	LIGHTING, MISC.: NON–ENCASED, BRIDGE–SUPPORTED 5–INCH FIBERGLASS REINFORCED CONDUIT BANK

Stokes 0031 (4:021) SFN: 1833936

CALC. BY V.S. DATE 12/95	CUYAHOGA COUNTY	OHIO
CHKD. BY T.H. DATE 12/95	CUY–FAIRHILL ROAD	FHWA REGION 5

30C / 58

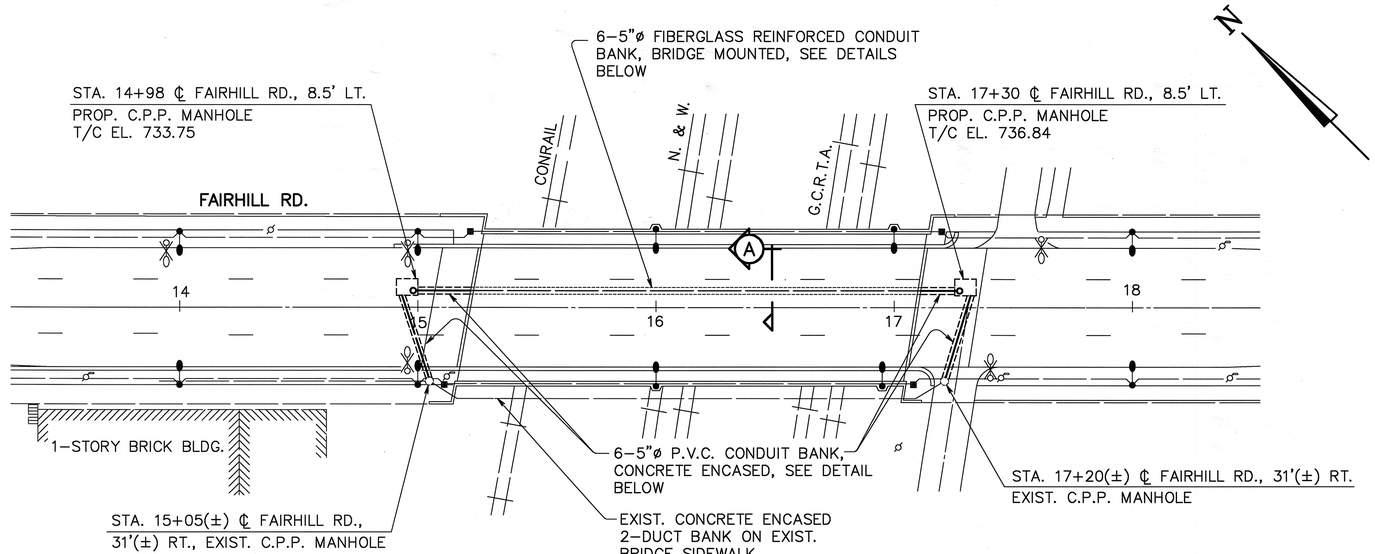

C.P.P. PLAN

C.P.P. SUB–SUMMARY

SIDE	FROM (STATION)	TO (STATION)	625 REINFORCED CONCRETE MANHOLE, AS PER PLAN	625 CONCRETE ENCASED CONDUIT BANK	625 NON–ENCASED BRIDGE SUPPORTED CONDUIT BANK
			EACH	LIN. FT.	LIN. FT.
LT.	14+98	14+98	1		
LT.	17+30	17+30	1		
LT.	15+02	15+22		20	
LT.	17+07.43	17+26		19	
LT.&RT.	14+98	15+05±		36.5	
LT.&RT.	17+20±	17+30		36.5	
LT.	15+22	17+07			185
TOTAL			2	112	185

C.P.P. LEGEND

- EXIST. C.P.P. MANHOLE
- PROP. C.P.P. MANHOLE
- BRIDGE MOUNTED CONDUIT BANK
- CONCRETE ENCASED CONDUIT BANK

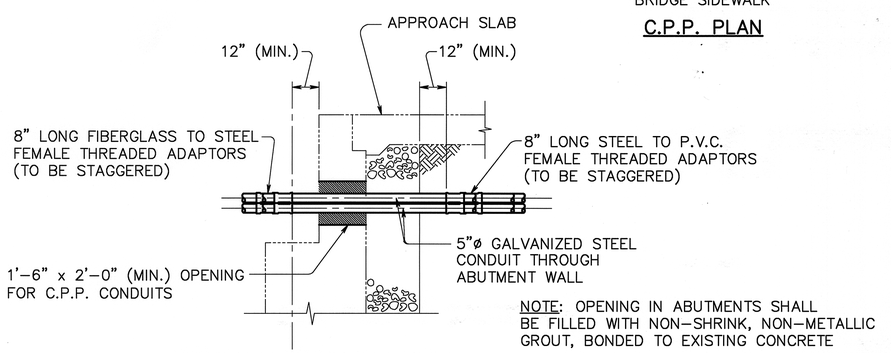

NOTE: OPENING IN ABUTMENTS SHALL BE FILLED WITH NON–SHRINK, NON–METALLIC GROUT, BONDED TO EXISTING CONCRETE

SECTION THROUGH ABUTMENT WALL

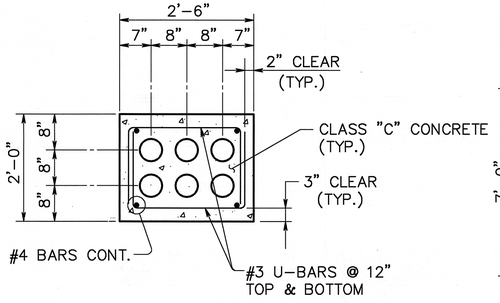

TYPICAL CONCRETE ENCASED DUCT BANK

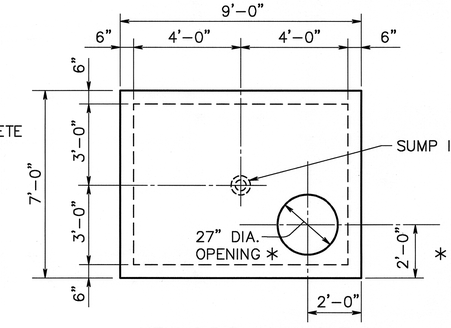

∗ OPENING LOCATION SHOWN FOR MANHOLE AT STA. 14+98.05 FOR MANHOLE AT STA. 17+30, LOCATE OPENING AT OPPOSITE END.

NEW C.P.P. MANHOLE

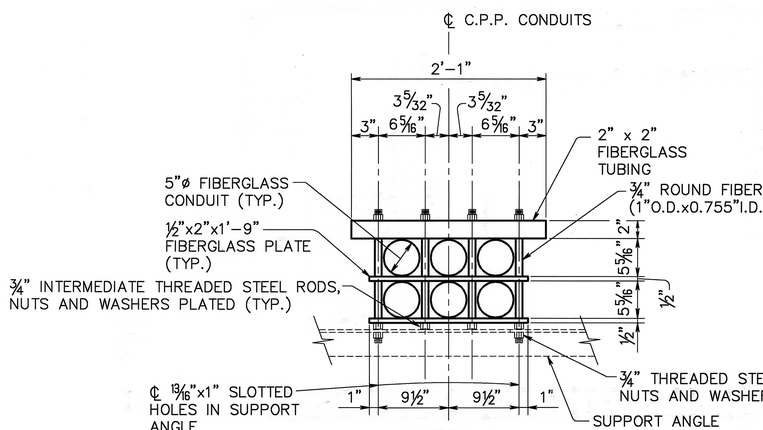

SECTION A

DUCT SUPPORT AND BRACKET ASSEMBLY

NOTE: FOR ADDITIONAL BRIDGE MOUNTED CONDUIT DETAILS SEE DETAIL BRIDGE PLANS

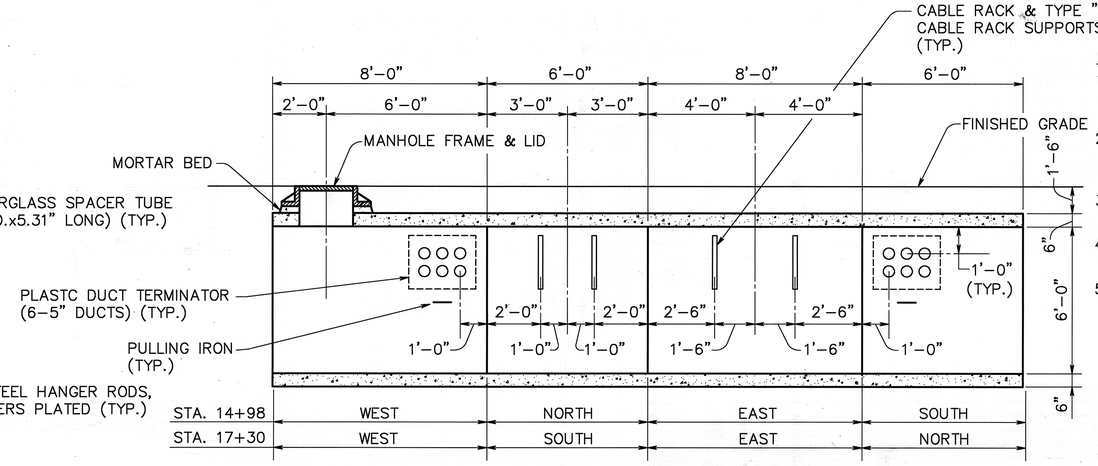

NEW C.P.P. MANHOLE

DEVELOPED ELEVATION (INSIDE WALLS)

NOTES:

1. THE PRECAST C.P.P. MANHOLE SHALL BE REINFORCED WITH DEFORMED #5 (GRADE 60) REINFORCING STEEL PLACED TO MEET TRAFFIC (HS–20) LOADING.
2. CABLE RACKS AND CABLE RACK SUPPORTS (TYPE "S") SHALL BE MACK INDUSTRIES NUMBER MUV–B–2 OR AN APPROVED EQUAL.
3. PLASTIC DUCT TERMINATORS SHALL BE AS RECOMMENDED BY THE VAULT MANUFACTURER.
4. THE PRECAST C.P.P. MANHOLE SHALL BE SET IN 6" GRANULAR BEDDING.
5. FOR MANHOLE FRAME AND LID DETAILS, SEE SHEET 30D.

Stokes 0031 (4:021) SFN: 1833936

CALC. V.S. BY DATE 12/95 | CHKD. T.H. BY DATE 12/95 | CUYAHOGA COUNTY CUY-STOKES BLVD. | OHIO | FHWA REGION 5 | 30D 58

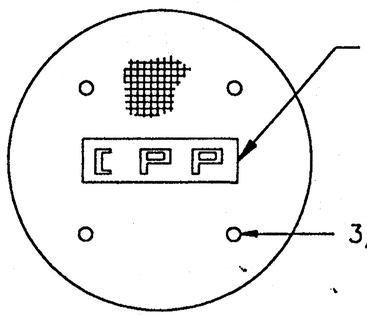

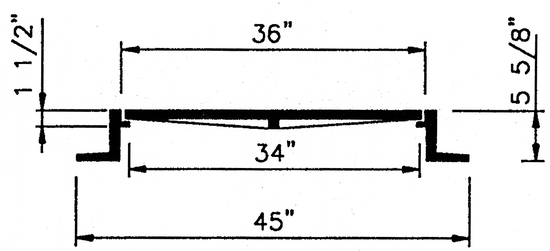

OPTION 1

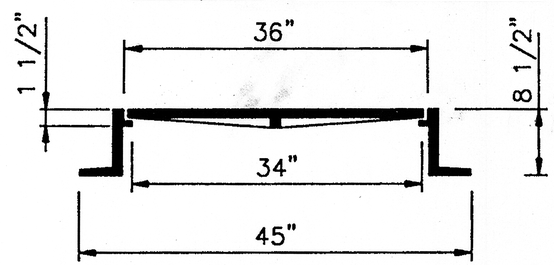

OPTION 2

COVER AND FRAME FOR PRECAST CONCRETE UTILITY VAULT

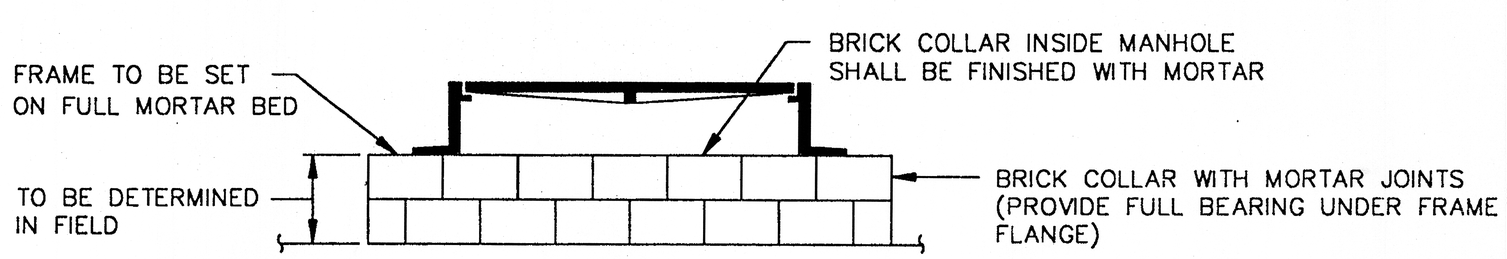

MANHOLE BRICK COLLAR-DETAIL

NTS

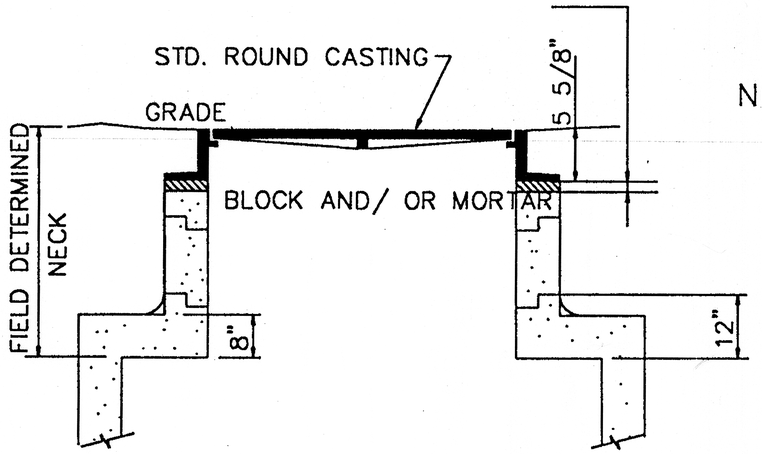

PRECAST CONCRETE MANHOLE DETAIL

NTS

1

NOTES:

1. BRICKS OR BLOCKS TO BE FLUSH WITH INSIDE FACE OF NECK RINGS.
2. PLACE SEALANT IN ALL NECK RING JOINTS BEFORE ASSEMBLY.
3. APPLY 1/2" THICK LAYER OF WATERPROOF MORTAR TO OUTSIDE SURFACE OF NECK. WATERPROOFING ADDITIVE TO BE ADDED TO MORTAR PER MANUFACTURER'S RECOMMENDATION.

1

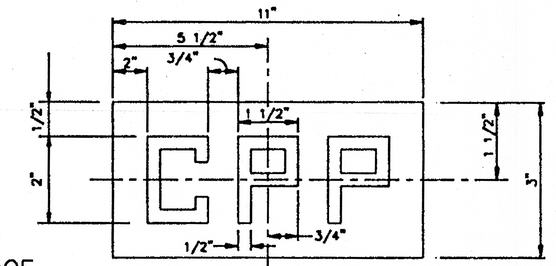

LETTERING - MANHOLE LID

NTS

REVISION	DATE	DESCRIPTION	BY	APPVD.	REFERENCE DRAWINGS	NO.	DATE	DES.
5	3/16/98	REVISED CASTING OPTIONS	SFT					
4	11/20/96	ISSUED FOR CONSTRUCTION	LAC					
3	07/08/97	ISSUED FOR CS BIDS	MCH					
2	01/01/96	ISSUED FOR CONSTRUCTION	MCH					
1	10/23/95	REVISED FOR ADDENDUM 2	MCH					
0	6/30/95	ISSUED FOR BID	MCH					

BBCK POLYTECH ENGINEERS

CLEVELAND PUBLIC POWER

MANHOLE COVER & FRAME, BRICK COLLAR & MANHOLE LID LETTERING DETAILS

DRAWN BY M.C.M. | CHKD BY L.C.H. | DATE 06-23-95 | DRAWING NUMBER 8507.5

10 - 14

CPP PLANS AND DETAILS

Stokes 0031 (4:021) SFN: 1833936

CALC. BY		CUYAHOGA COUNTY	OHIO	31
DATE		CUY–FAIRHILL ROAD	FHWA REGION 5	58
CHKD. BY				
DATE				

BENCHMARK: ELEV. 707.944
O.M. #X–15 – APPROX. 26 FT. S.W. OF ℄ OF FAIRHILL RD. AND 30 FT. S. OF ℄ OF CEDAR AVE. 31.35 FT. S.W. OF DRILL HOLE IN STONE MON. IN BOX AT ℄ INTERSECTION.

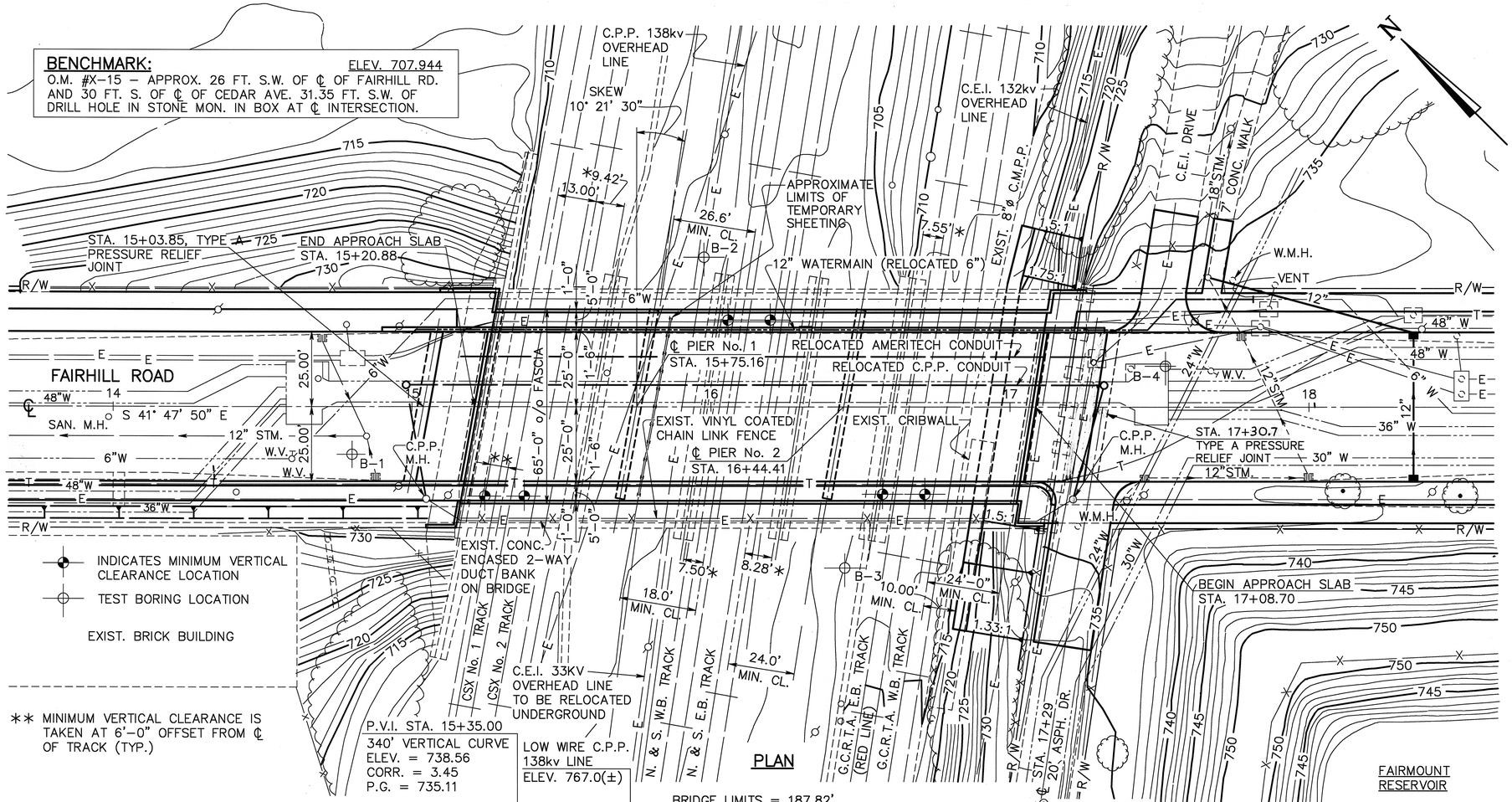

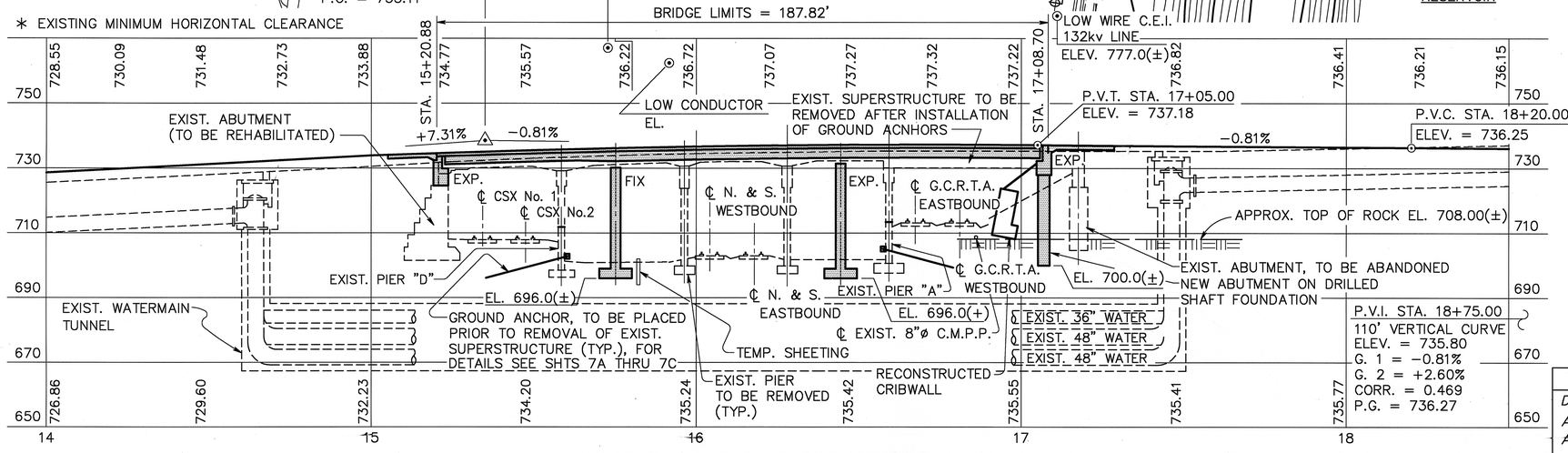

PROFILE ALONG ℄ OF FAIRHILL ROAD

EXISTING UTILITY DISPOSITION

1. EXISTING 6" ø WATERMAIN TO BE REMOVED AND REPLACED WITH RELOCATED 12" ø WATERMAIN.
2. EXISTING C.P.P. CONDUITS TO BE RELOCATED.
3. EXISTING AMERITECH CONDUIT BANK TO BE RELOCATED.
4. EXISTING C.E.I. CONDUIT BANK TO BE RELOCATED OFF THE STRUCTURE.

VERTICAL CLEARANCE

	EXISTING	PROPOSED
CSX No. 1	21.56' ‡	22.02' ‡
CSX No. 2	21.07' ‡	22.46' ‡
N & S WESTBOUND	27.14'	28.57'
N & S EASTBOUND	27.06'	28.72'
GCRTA EASTBOUND	16.64'	19.90'
GCRTA WESTBOUND	16.60'	20.00'

‡ VERTICAL CLEARANCES ARE BASED ON TOP OF RAIL ELEVATIONS OBTAINED BY FIELD SURVEY, JUNE 19, 2000.

EXISTING STRUCTURE

TYPE: One span of concrete encased rolled steel beams; 3 reinforced concrete slab spans; concrete gravity abutment at north, concrete beam on caissons at south; one concrete and brick encased steel pier, three reinforced concrete piers.

SPANS: 60.25', 31.389', 31.389', 36.655' & 35.008'

ROADWAY: 50'–0" f/f curbs; 14'–0"(±) sidewalks with reinforced concrete panel railing

LOADING: Three 20–ton trucks

SKEW: 10° 21' 30" and 9° 01' 50" lt. fwd.

DATE BUILT: c.1930

STRUCTURE FILE No.: 1831003

PROPOSED STRUCTURE

TYPE: Continuous A588 rolled steel beams composite with reinforced concrete deck; reinforced concrete substructure.

SPANS: 52'–0", 69'–3", 62'–0"

ROADWAY: 50'–0" f/f curbs W/5'–0" sidewalks protected by safety shape barriers and vandal protection fence on concrete parapet.

LOADING: HS–20–44, case II and the alternate military loading.

SKEW: 10° 21' 30" lt. fwd.

ALIGNMENT: Tangent

APPROACH SLABS: AS–1–81, 15'–0" long rear, 20'–0" long forward

CROWN: 3/16"/FT.

NOTE: EARTHWORK LIMITS SHOWN ARE APPROXIMATE. ACTUAL SLOPES AND SHALL CONFORM TO PLAN CROSS SECTIONS.

TRAFFIC DATA

Design Year : 2009
A.D.T. = 28,000
A.D.T.T. = 280

1 / 23

STILSON & ASSOCIATES, INC.
CONSULTING ENGINEERING AND ARCHITECTURE
COLUMBUS AND CLEVELAND

SITE PLAN

CITY OF CLEVELAND BRIDGE No. 4:021C

FAIRHILL ROAD OVER NORFOLK & WESTERN R.R., CONRAIL, & G.C.R.T.A.
CUYAHOGA COUNTY STA. 15+20.88 STA. 17+08.70

DESIGNED	DRAWN	TRACED	CHECKED	REVIEWED	DATE	REVISED
W.M.	C.A.G.		G.R.E.	G.W.M.	1/25/91	

Stokes 0031 (4:021) SFN: 1833936

FHWA REGION	STATE	PROJECT	TYPE FUNDS
5	OHIO		

32
58

CUYAHOGA COUNTY
CUY–FAIRHILL ROAD

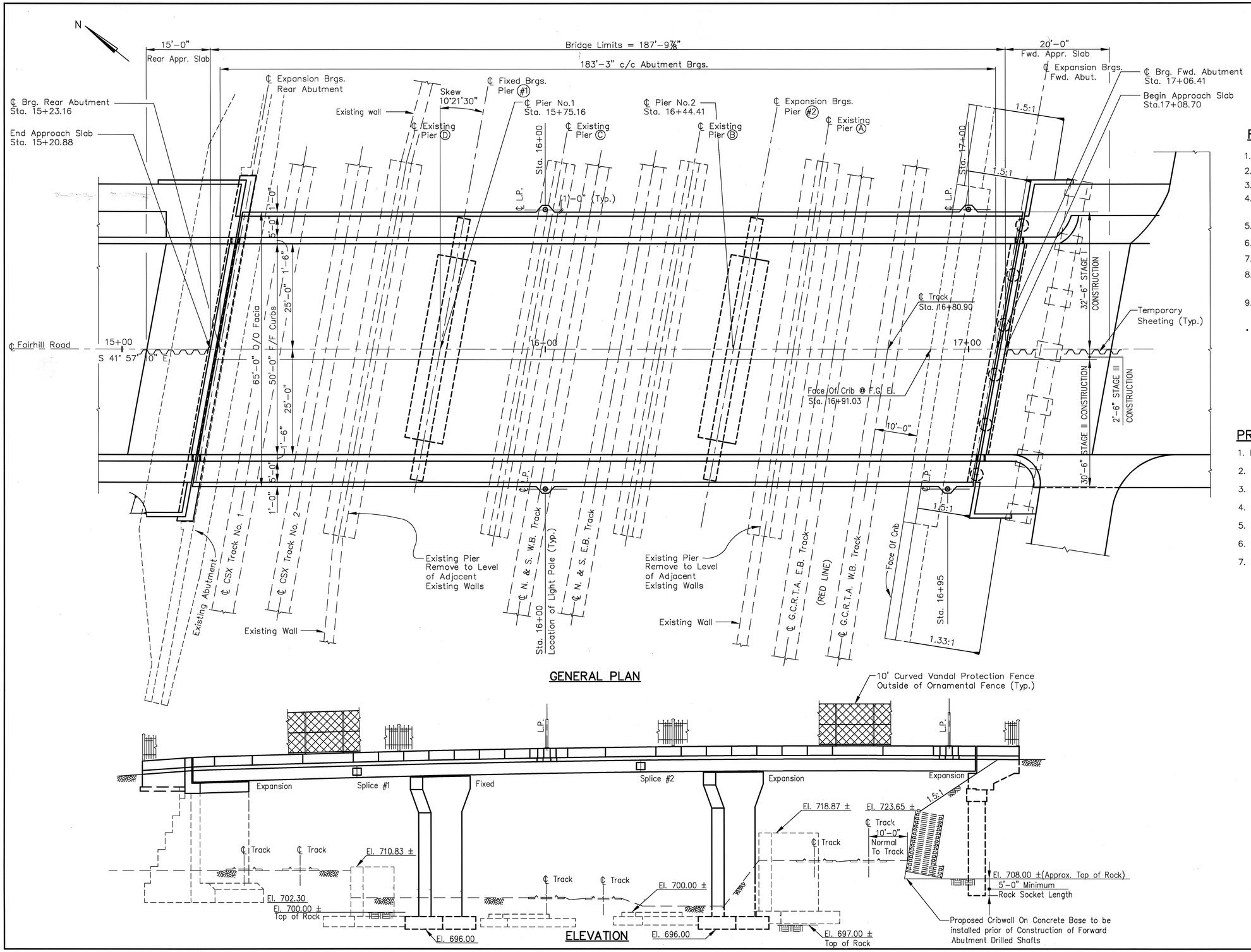

GENERAL PLAN

ELEVATION

REFERENCES:

1. For site plan see sht. 1/23
2. For general notes, see shts. 3/23, 4/23 & 5/23
3. For estimated quantities see sht. 7/23
4. For maintenance of traffic & stage constructions see shts. 8/23, 9/23
5. For substructure details see sht. 10/23 thr. 13/23
6. For superstructure details see sht. 15/23 thr. 23/23
7. For reinforcing schedule see sht. 21/23, 22/23 & 23/23
8. For approach slab details, see ODOT Std. Dwg. AS–1–81.
9. For fence details see sht. 20/23

- F.G. El. indicates Finish Grade Elevation.

PROPOSED WORK:

1. Installation of temporary sheeting for staged construction.
2. Staged removal of existing bridge.
3. Modification of existing rear concrete gravity abutment.
4. New forward abutment on drilled shafts.
5. New piers on spread footings.
6. New superstructure.
7. Installation of crib wall next to GCRTA tracks.

2/23

G & T ASSOCIATES INC. Consulting Engineers
11925 Pearl Rd. Strongsville, Ohio 44136 (216) 572–0555

GENERAL PLAN AND ELEVATION

CITY OF CLEVELAND BRIDGE NO. 4:021C
FAIRHILL ROAD OVER NORFOLK & WESTERN R.R., CONRAIL & G.C.R.T.A.
CUYAHOGA COUNTY STA. 15+20.88 STA. 17+08.70

DESIGNED	DRAWN	TRACED	CHECKED	REVIEWED	DATE	REVISED
DN	VM	——	DJC	CKP	12/94	

Stokes 0031 (4:021) SFN: 1833936

GPLAN–1.DWG. PLOT SCALE: 1=128

FHWA REGION	STATE	PROJECT	TYPE FUNDS	33 / 58
5	OHIO			

CUYAHOGA COUNTY
CUY–FAIRHILL ROAD

STRUCTURAL GENERAL NOTES

STANDARD DRAWINGS AND SUPPLEMENTAL SPECIFICATIONS

Reference shall be made to Standard Drawings; and to Supplemental Specifications:

AS–1–81	Dated	09–15–94
EXJ–4–87	Dated	11–12–93
BS–1–93	Dated	12–19–94
BR–2–82	Dated	11–1–82
VPF–1–90M	Dated	03–20–95

816 Dated 04–21–97
863 Dated 09–09–97
846 Dated 09–09–97
954 Dated 09–09–97
843 Dated 05–05–98

DESIGN SPECIFICATIONS:

This structure conforms to "Standard Specifications for Highway Bridges" adopted by the American Association of State Highway and Transportation Officials, 1992, including the 1993 Interim Specifications and the ODOT Bridge Design Manual.

DESIGN DATA:

Design Loading – HS20–44, Case II and the Alternate Military Loading

Concrete – Class S – compressive strength 4500 psi for superstructure
– Class C – compressive strength 4000 psi for substructure

Reinforcing Steel – ASTM A615, A616, or A617 Grade 60 minimum yield strength 60,000 psi
– Spiral reinforcement may be plain bars, ASTM A82 or A615

Reinforcing Bar Splices – Reinforcing bar splice length shall conform to the minimum lengths as specified in Section 8.25 of AASHTO specifications, unless otherwise noted on the plans.

Structural Steel – ASTM A588 yield strength 50,000 psi

Deck Protection Method – Epoxy coated reinforcing steel, 2 1/2" concrete cover and sealing of concrete.

Monolithic Wearing Surface – is assumed, for design purposes, to be 1" thick.

PORTIONS OF STRUCTURES REMOVED

Removal of the existing Fairhill Road Bridge includes the complete demolition, removal and disposal of the entire superstructure. The abutments and existing piers shall be removed in part as shown on sheets 8/23 and 9/23 Removal shall be coordinated with stage construction requirements.

CUT LINE CONSTRUCTION JOINT PREPARATION

Saw cut boundaries of proposed concrete removals 1" deep. Remove concrete to a rough surface. Where practicable, the existing reinforcing steel where required in the plans shall be left in place. Install dowel bars if specified. Prior to concrete placement abrasively clean joint surface and exposed reinforcement to remove loose and disintegrated concrete and loose rust. Then, the joint surface and exposed reinforcement shall be thouroughly cleaned of all dirt, dust, or other foreign material by the use of water, air under pressure, or other methods that produce satisfactory results. Concrete bonding surfaces shall be wet without free water as concrete is placed.

SUBSTRUCTURE CONCRETE REMOVAL

Substructure masonary or concrete removal shall be by means of approved pneumatic hammers employing pointed and blunt chisel tools. Hydraulic hoe–ram type hammers will not be permitted. The weight of the hammer shall not be more than 35 pounds for removal within 18 inches of portions to be preserved. Outside the 18–inch limit, a hammer heavier than 35 pounds, but not to exceed 90 pounds, may be used at the approval of the Engineer. Pneumatic hammers shall not be placed in direct contact with reinforcing steel that is to be retained below in the existing piers. Cut reinforcement at 1 1/2" below the top of existing piers to remain. Remove additional 2" of concrete around the rebar to remain. Finish the top and side surfaces of removal area with patch concrete to the elevations and sides of the adjoining concrete surfaces. The payment of patch concrete shall be included in the pay Item 202 "portion of structure removed", As Per Plan.

ITEM 503 – UNCLASSIFIED EXCAVATION, AS PER PLAN

Unclassified excavation shall be in accordance with 503 except that the backfill material behind the abutments shall be 203 granular material placed in lifts not to exceed a thickness of six (6) inches.

FOUNDATION BEARING PRESSURE

Pier footings, as designed, produce a maximum bearing pressure of 3.2 tons per square feet. The allowable bearing pressure is 6.0 tons per square foot.

FOOTINGS

Footings shall be placed in bedrock at the elevation shown.

UTILITY LINES:

All expense involved in relocating the affected utility lines shall be borne by the utilities. The contractor and utilities are to cooperate by arranging their work in such a manner that inconvenience to either will be held to a minimum.

EXISTING STRUCTURE VERIFICATION

Details and dimensions shown on these plans pertaining to the existing structure have been obtained from plans of the existing structure and/or from field obeservations and measurements. Consequently, they are indicative of the existing structure and the proposed work but they shall be considered tentative and approximate. The contractor is referred to CMS sections 102.05, 105.02, and 513.02.

Contract bid prices shall be based upon a recognition of the uncertainties described above and upon a prebid examination of the existing structure by the contractor. However, all project work shall be based upon actual details and dimensions which have been verified by the contractor in the field.

Plans of the existing structure are available at the City of Cleveland, Division of Engineering and Construction. It is recommended that the contractor review these plans prior to submitting his bid.

EXISTING REAR ABUTMENT REPAIR

The quantity listed in the summary of quantities is the estimated amount of repair required to patch the existing rear abutment and does not include those portions of the existing rear abutment to be removed and replaced. The quantity is based on visual inspection of the existing rear abutment and is not to be construed to represent the exact amount of patching required to rehabilitate the existing rear abutment. Payment will be based on the actual work performed at the unit price bid for Item Special – Patching Concrete Structures With Trowelable Mortar.

DESCRIPTION OF DETERIORATION

Deterioration to be repaired under this contract shall be defined as those areas of original concrete surface marked by the Engineer.

ITEM 518 – 6" PERFORATED CORRUGATED PLASTIC PIPE, AS PER PLAN

Corrugated pipe used in abutment drainage shall be 6 inch diameter, plastic corrugated as per CMS 707.33, AASHTO M294, Type SP.

ITEM 518 – 6" NON–PERFORATED CORRUGATED PLASTIC PIPE, INCLUDING SPECIALS, AS PER PLAN

Corrugated pipe used in abutment drainage shall be 6 inch diameter, plastic corrugated as per CMS 707.33, AASHTO M294, Type S. This item shall include all elbows, tees and end caps required to complete the abutment drainage system.

CONCRETE PARAPETS & SAFETY BARRIERS

For construction of Concrete Parapets and Safety Barriers ,no Slip Forming shall be allowed.

As soon as a concrete saw can be operated without damaging the freshly placed concrete, 1 inch deep control joints shall be sawed into the perimeter of the concrete parapet and safety barrier at locations as detailed in the plans. The saw cut shall be made in the complete circumference of the parapet, starting and ending at the elevation of the concrete sidewalk. The saw cut shall also be made in the circumference of the safety barrier, starting and ending at the elevation of the upper construction joint. The use of an edge guide, fence, or jig is required to insure that the cut joint is straight, true, and aligned on all faces of the parapet and safety barrier. The joint width shall be the width of the saw blade, a nominal width of 1/4 inch. The perimeter of the deflection control joint shall be sealed to a minimum depth of 1 inch with a caulking material conforming to Federal Specification, TT–S–00227E to a minimum depth of 1 inch.

SEQUENCE OF PROPOSED WORK

The major items of work required and the suggested sequence of operations are as follows:

Maintenance of Traffic:

Two lanes of traffic with a minimum horizontal width of 22'–0" shall be maintained at all times.

STAGE I CONSTRUCTION

1. Install temporary traffic signals, barrier, signs, striping, etc. to maintain two lanes of traffic on existing southbound lanes, right of centerline Fairhill Road as shown on sheets 8/23 and 9/23
2. Divert existing utilities as shown in the plans.
3. Construct temporary sheeting to retain existing approach pavement. See Stage Construction Details.
4. Remove existing structure as shown on plans as Stage I Removal.
5. Perform Stage I construction operations. Relocation of existing private utilities shall be coordinated with the respective owners.
6. Construct temporary sheeting to support Stage I approaches and complete approach pavement to meet existing.

STAGE II CONSTRUCTION

7. Relocate traffic control devices, as required, to transfer traffic from the existing southbound lanes right of centerline Fairhill Road to the new southbound lanes left of centerline Fairhill Road.
8. Remove existing structure shown on plans as Stage II Removal.
9. Perform Stage II construction operations.
10. Construct approaches to meet existing.

STAGE III CONSTRUCTION

11. Install crossframes in bay between Beams (D) and (E).
12. Perform Stage III construction operations.
13. Install elastomeric joint seals for both deck joints for both stages. Seals shall be one continuous piece for each joint.

Simultaneous construction operations will be permitted as approved by the Engineer.

REQUIREMENTS OF CSX, N & S RR, AND GCRTA (RED LINE)

All reference to "The Railroad" or "The Railroad Company" herein shall be meant to apply to The Consolidated Rail Corporation, The Norfolk and Western Railway Company (N & W) and/or the Greater Cleveland Regional Transit Authority (GCRTA).

GENERAL

The contractor shall:

1. Prior to commencing any work involving the removal of the existing structure, the contractor shall submit to the Engineer and Railroads, for approval, complete details of the proposed method for removing the existing structure, including the method for protecting the tracks. No demolition shall begin until written approval is received from the Railroads and the Engineer. All work above or directly adjacent to the railroad shall be subject to the approval of the railroad company and to inspection at all times by its properly designated representative. Safety and continuity of operations of the railroad traffic and the protection of railroad communication and power lines shall be of major importance and shall at all times be protected and safeguarded. The contractor shall give written notice to the duly authorized representative of the railroad at least ten working days in advance of the time the contractor intends to commenc any work above or directly adjacent to the railroad. Whenever performing any work such as construction of piers or setting of new beams, which, in the opinion of the Engineer, could affect railroad operation, the contractor shall submit complete plans and details of the proposed work to both the Railroad and the Engineer for approval. No such work shall be commenced or prosecuted without prior approval of both agencies. Approval of such work shall not be construed as a release from responsibility or liability for any damage which the railroad may suffer.

2. CONSTRUCTION ADJACENT TO TRACKS

The construction clearance for each railroad shall be as listed below:

	GCRTA	N & S	CSX
Vertical – above top of rail	17'–2 1/4"	22'–0"	21'–0"
Horizontal – from centerline of track	7'–6"	13'–0"	13'–0"

3. See Special Clauses in the Proposal for specific requirements for work on Railroad property.

CONVERSION OF STANDARD BRIDGE DRAWINGS

The standard bridge drawings referenced in this plan are metric. Any conversion of dimensions required to construct the items shown on the standards shall be the repsonsibility of the Contractor. Conversions shall be made using the SI (Metric) to English Conversion Factors provided in section 109.011 of the 1997 Construction and Materials Specifications. The appendix of ASTM E380 shall be utilized for any additional conversion factors required. Conversions shall be appropriately precise and shall reflect standard industry English values where suitable.

3 / 23

G & T ASSOCIATES INC. Consulting Engineers
11925 Pearl Rd. Strongsville, Ohio 44136 (216) 572–0555

GENERAL NOTES – 1

CITY OF CLEVELAND BRIDGE NO. 4:021C
FAIRHILL ROAD OVER NORFOLK & WESTERN R.R., CONRAIL & G.C.R.T.A.
CUYAHOGA COUNTY STA. 15+20.88 STA. 17+08.70

DESIGNED	DRAWN	TRACED	CHECKED	REVIEWED	DATE	REVISED
DN	VM	—	DJC	CKP	12/94	

Stokes 0031 (4:021) SFN: 1833936

STRUCTURAL GENERAL NOTES (cont'd)

REMOVAL

1. The contractor shall remove the designated portions of the existing bridge to the limits shown on the plans. Parts designated by the plans for removal may be removed by methods of the contractor's selection. No part or debris shall be permitted to be dropped on the ground or on the railroad. The plans of the existing bridge are available for perusal at Room 518, City Hall, Cleveland, Ohio.

2. The removal shall include, but not be limited to the following:

   (a) Superstructure including concrete encased structural steel girders, concrete deck slab, curb, sidewalks, parapets, fence, approach slabs or approach pavement and other items associated with the existing bridge deck.

   (b) Existing rear abutment.

   (c) Existing piers.

3. Existing rear abutment shall be removed as per plan and per Item 202.03 of Construction and Material Specifications.

4. Existing piers shall be removed as per plan and per Item 202.03 of Construction and Material Specifications and as per the removal Note 3 above. Contractor's attention is also drawn to the construction clearance requirements. He shall obtain the approval of the Engineer for the removal method before the actual demolition work is started.

5. Under no circumstances shall the material be permitted to remain on the premises, right–of–way, or streets pending disposal of same or for any other purposes, unless otherwise approved by the Engineer.

RESTRICTIONS BY GCRTA **(RED LINE)**

1. All work over GCRTA tracks shall be coordinated with authority personnel. Authority personnel will perform all work necessary for maintenance of regular, continuous rapid transit service.

2. While performing the following major work items over and adjacent to (within ten (10) feet from centerline) any GCRTA track, the following restrictions apply.

WORK ITEM	RESTRICTIONS
Demolitions and portions of structure removal	Nighttime work only
Superstructure steel erection	Nighttime work only
All work related to the removal and construction/reconstruction of substructure (abutment, piers, etc.)	Single track operation

The following define the nighttime and the single track operation periods for the GCRTA tracks.

Nighttime work – Between 1:00 A.M. and 3:30 A.M.

Single track operation – If required, single tracking can occur between 10:30 P.M.–1:00 A.M. Monday – Sunday. This means no single tracking or stopping of train traffic between 3:30 A.M. – 10:30 P.M. Monday–Sunday. EXCEPTION: No single track operation permitted on special event days as determined by GCRTA.

During the nighttime period between 1:00 A.M. and 3:30 A.M., the overhead power to the catenary system will be de–energized by the GCRTA personnel upon the contractor's request. A written request shall be submitted to the Director of Rail Transportation at least 72 workday hours ahead of the scheduled need. Overhead propulsion power cables (600 volts D.C.) are always to be considered hot. The contractor should never assume the power is shut off until actually confirmed by GCRTA power personnel.

3. No at–grade crossing of GCRTA tracks will be permitted.

4. The contractor shall provide, install, erect, and maintain suitable lighting and protection for safe and efficient progress of nighttime work and for any work that is to be performed after daylight hours.

5. No separate payment will be made to the contractor for additional costs due to work restrictions for nighttime and/or the single track operation. The costs shall be included with the unit price bid for work items of the contract so restricted.

6. GCRTA flagmen will be required whenever work is performed over or within 10 feet of the centerline of either track. Request for flagmen must be submitted to the Director of Rail Transportation for a minimum of 48 hours in advance of the date needed.

7. Single tracking request shall be submitted to the Director of Rail Transportation a minimum of 72 hours in advance of the date needed.

8. Contractor personnel shall wear safety vests whenever work is performed within 10 feet of the centerline of either track.

ITEM SPECIAL – TEMPORARY FALSEWORK AND PROTECTIVE STRUCTURES

1. GENERAL

   This work shall consist of constructing and removing electrically insulated rigid temporary constructions required to complete the work in addition to the falsework and items which are specifically included elsewhere. The work includes temporary platforms or other means to prevent loose materials from falling during the construction of superstructure over the GCRTA tracks.

2. REQUIREMENTS

   In order to protect GCRTA traffic against damage from falling material and debris while superstructure concrete is being placed or while work is in progress overhead, the contractor shall furnish and erect a temporary protective structure under the spans that are directly over the GCRTA tracks.

   The flooring and siding of the structures shall have no cracks or openings through which material particles may fall. As a minimum, one layer of 3/4 inch plywood with lapped joints or an equivalent design shall be placed between the lower flanges of the structural steel beams above the track bed and shoulders of the GCRTA tracks. The protection in all cases shall extend beyond the exterior structural beams a sufficient distance to protect under the bridge railings.

   After the temporary falsework and protective structures have served their purpose, and when so directed by the Engineer, they shall be removed. All materials shall become the property of the contractor and shall be removed from the site and disposed of by the contractor at his own expense.

   Details of the temporary falsework and protective structures, including the proposed temporary underclearances to the GCRTA tracks, shall be submitted to the Engineer and GCRTA for approval at least two weeks prior to commencement of falsework construction.

3. PAYMENT

   The cost for all materials, equipment, and incidentals necessary to provide the temporary falsework and protective structures in accordance with the above provisions shall be included in:

ITEM	UNIT	DESCRIPTION
Special	Lump Sum	Structure, misc.: Temporary falsework and protective structures.

G & T ASSOCIATES INC. Consulting Engineers
11925 Pearl Rd. Strongsville, Ohio 44136 (216) 572–0555

GENERAL NOTES – 2

CITY OF CLEVELAND BRIDGE NO. 4:021C

FAIRHILL ROAD OVER NORFOLK & WESTERN R.R., CONRAIL & G.C.R.T.A.

CUYAHOGA COUNTY STA. 15+20.88 STA. 17+08.70

DESIGNED	DRAWN	TRACED	CHECKED	REVIEWED	DATE	REVISED
DN	VM	—	DJC	CKP	12/94	

SFN: 1833936
Stokes 0031 (4:021) S

GENNOTE2.DWG PLOT SCALE: 1=1

ITEM SPECIAL – TIEBACKS

1.0 DESCRIPTION

THIS WORK SHALL CONSIST OF PERMANENT TIEBACK RETAINING SYSTEM CONSTRUCTED IN ACCORDANCE WITH THIS SPECIFICATION AND IN REASONABLY CLOSE CONFORMITY WITH THE LINES, GRADES, DESIGN, AND DIMENSIONS SHOWN ON THE PLANS OR ESTABLISHED BY THE ENGINEER. THE TIEBACK WORK TO BE PERFORMED SHALL COMPLY WITH THE CONTENTS OF THE LATEST EDITION OF "RECOMMENDATIONS FOR PRESTRESSED ROCK AND SOIL ANCHORS," PUBLISHED BY THE POST TENSIONING INSTITUTE (PTI) LOCATED AT 1717 W. NORTHERN AVENUE, SUITE 114, PHOENIX, ARIZONA 85021 (TELEPHONE 602–870–7541) EXCEPT AS MODIFIED HEREIN.

THE REQUIRED ANCHOR ELEVATIONS AND THE TOTAL HORIZONTAL DESIGN LOAD ARE SHOWN ON THE PLANS. THE GROUND ANCHOR ASSEMBLY AND DISTRIBUTION BEAM SHALL BE DESIGNED BY THE CONTRACTOR.

THE ANCHOR SYSTEM SHALL BE DESIGNED FOR A LOAD FACTOR OF 1.4 UNLESS OTHERWISE NOTED.

1.1 DESIGN PROPOSAL

THE CONTRACTOR SHALL BE RESPONSIBLE FOR PREPARING AND SUBMITTING A DESIGN PROPOSAL DESCRIBING THE TIEBACK SYSTEM INTENDED FOR THE PROJECT. THE DESIGN PROPOSAL SHALL INCLUDE:

A. DESCRIPTION OF THE GROUND ANCHOR INSTALLATION (INCLUDING DRILLING, GROUTING AND STRESSING INFORMATION).
B. ESTIMATED GROUND ANCHOR CAPACITY.
C. GROUND ANCHOR TENDON TYPE AND CAPACITY.
D. GROUND ANCHOR ANCHORAGE TYPE.
E. GROUND ANCHOR MINIMUM BONDED LENGTHS, MINIMUM UNBONDED LENGTHS, TOTAL GROUND ANCHOR LENGTHS, ANGLES OF INSTALLATION AND LOCATIONS.
F. CORROSION PROTECTION DETAILS FOR GROUND ANCHORS AND HARDWARE.
G. DETAILED PLANS FOR PROOF, CREEP, PERFORMANCE AND LIFT–OFF TESTING OF GROUND ANCHORS SHOWING LOADING AND MEASURING DEVICES TO BE USED, TEST LOCATIONS, AND TESTING PROCEDURES TO BE FOLLOWED.
H. DETAILED PLANS FOR EMBEDMENT ANCHORAGE.
I. CALCULATIONS AND CONSTRUCTION DRAWINGS PREPARED, STAMPED AND SIGNED BY A CIVIL OR STRUCTURAL ENGINEER REGISTERED AS A PROFESSIONAL ENGINEER IN THE STATE OF OHIO. THESE DRAWINGS MUST SHOW EXPLICIT DETAILS TO ALLOW EXPEDITIOUS REVIEW OF THE PROPOSED DESIGN AND CONSTRUCTION PROCEDURE. THE CONTRACTOR SHALL SUBMIT THREE (3) COPIES OF THE PLANS AND TWO (2) COPIES OF THE DESIGN CALCULATIONS TO THE DIRECTOR, AT LEAST FIFTEEN (15) DAYS PRIOR TO BEGINNING WORK, AND SHALL RECEIVE APPROVAL BEFORE STARTING. ALSO, THE CONTRACTOR SHALL SUBMIT THREE ADDITIONAL COPIES OF THE PLANS AND DESIGN CALCULATIONS TO THE PROJECT ENGINEER WHO WILL FORWARD TO CSXT FOR REVIEW AND APPROVAL.

2.0 QUALIFICATION OF CONTRACTOR

THE CONTRACTOR PROPOSING TO PERFORM THE TIEBACK WORK FOR THIS PROJECT SHALL BE PREQUALIFIED WITH THE OHIO DEPARTMENT OF TRANSPORTATION (ODOT) PER THE OHIO REVISED CODE 5525.02 THROUGH 5525.09.

PRIOR TO THE COMMENCEMENT OF TIEBACK WORK, THE CONTRACTOR SHALL SUBMIT TO THE PROJECT ENGINEER A REPORT WHICH IDENTIFIES THE CONTRACTOR'S PERSONNEL WHO WILL BE PERFORMING AND SUPERVISING THE TIEBACK WORK. THE REPORT SHALL INCLUDE THE NAMES OF AN ENGINEER–IN–CHARGE, ON–SITE SUPERVISORS, AND DRILL OPERATORS. THE REPORT SHALL ALSO CONTAIN A LIST OF EMPLOYER'S NAMES AND TELEPHONE NUMBERS, LOCATION AND DATES OF PREVIOUS PERMANENT TIEBACK PROJECTS, AND THE EXTENT OF WORK PERFORMED. THIS INFORMATION MUST BE VERIFIABLE. TIEBACK WORK SHALL BE DEFINED AS ALL ACTIVITIES RELATED TO THE TIEBACKS, INCLUDING FURNISHING, FABRICATING, DRILLING, INSTALLING, AND TESTING THE TIEBACKS.

FURTHER, IN ORDER TO MEET THE REQUIREMENTS OF ODOT SPECIFICATION 108.05, THE PERSONNEL PERFORMING TIEBACK WORK SHALL HAVE ACQUIRED WORK EXPERIENCE WHICH IS NOT LESS THAN THE LEVEL OF EXPERIENCE AS DEFINED BELOW:

2.1 ENGINEER–IN–CHARGE

THE ENGINEER–IN–CHARGE SHALL BE A REGISTERED PROFESSIONAL ENGINEER AND SHALL BE RESPONSIBLE FOR OVERSEEING THE TIEBACK WORK AND VERIFYING THE RESULTS OF THE TIEBACK TESTING. THE ENGINEER–IN– CHARGE SHALL HAVE THREE (3) YEARS OF CONSTRUCTION EXPERIENCE IN THE INSTALLATION OF PERMANENT TIEBACKS AND SHALL HAVE OVERSEEN THE SUCCESSFUL INSTALLATION OF 100 PERMANENT TIEBACKS. THE WORK EXPERIENCE TIME PERIOD IS COMPUTED BY THE ADDITION OF ALL DOCUMENTED DURATIONS OF TIEBACK WORK TIME ON CONSTRUCTION PROJECTS.

2.2 ON–SITE SUPERVISORS

AN ON–SITE SUPERVISOR SHALL BE PRESENT AT THE JOB SITE AT ALL TIMES DURING THE PERFORMANCE OF TIEBACK WORK. THE ON–SITE SUPERVISOR SHALL HAVE ONE (1) YEAR OF CONSTRUCTION EXPERIENCE IN THE INSTALLATION OF PERMANENT TIEBACKS AND SHALL HAVE SUPERVISED THE SUCCESSFUL INSTALLATION OF 100 PERMANENT TIEBACKS. THE WORK EXPERIENCE TIME PERIOD IS COMPUTED BY THE ADDITION OF ALL DOCUMENTED DURATIONS OF TIEBACK WORK TIME ON CONSTRUCTION PROJECTS.

2.3 DRILL OPERATORS

DRILL OPERATORS SHALL HAVE SUCCESSFULLY INSTALLED 50 PERMANENT TIEBACKS.

THE PROJECT ENGINEER WILL APPROVE OR REJECT THE CONTRACTOR'S PERSONNEL WITHIN THIRTY (30) CALENDAR DAYS FOLLOWING THE SUBMISSION OF THE REPORT OF NAMES AND VERIFIABLE RESUME INFORMATION. TIEBACK WORK SHALL NOT COMMENCE UNTIL A WRITTEN LETTER OF APPROVAL HAS BEEN PROVIDED BY THE PROJECT ENGINEER. IN THE EVENT THE CONTRACTOR ELECTS TO SUBSTITUTE PERSONNEL, VERIFIABLE RESUME INFORMATION SHALL BE SUBMITTED TO THE PROJECT ENGINEER PRIOR TO THAT INDIVIDUAL'S PERFORMANCE OF TIEBACK WORK. THE PROJECT ENGINEER WILL APPROVE OR REJECT THE CONTRACTOR'S PROPOSED SUBSTITUTE WITHIN FIFTEEN (15) CALENDAR DAYS.

THE PROJECT ENGINEER WILL TAKE ACTION AFFORDED TO HIM PURSUANT TO ODOT SPECIFICATIONS, INCLUDING BUT NOT LIMITED TO SPECIFICATION 108.05, IN ORDER TO BE ASSURED THAT ALL PERSONNEL HAVE THE SUFFICIENT AND REQUISITE SKILL AND EXPERIENCE TO PERFORM PROPERLY THE WORK ASSIGNED TO THEM.

3.0 DEFINITIONS

3.1 TIEBACK

A STRUCTURAL SYSTEM WHICH USES AN ANCHOR TO SECURE A TENDON WHICH APPLIES A FORCE TO A STRUCTURE.

3.2 TENDON

THE INDIVIDUAL PRESTRESSING STEEL BAR OR STRAND WITH A GREASE FILLED SHEATHING.

3.3 ANCHOR (BOND) LENGTH

THE LENGTH OF THE PRESTRESSING STEEL WHERE THE TENSILE FORCE IN THE PRESTRESSING STEEL IS TRANSFERRED TO THE GROUND.

3.4 UNBONDED LENGTH

THE LENGTH OF THE PRESTRESSING STEEL WHICH IS FREE TO ELONGATE AND IS LOCATED BETWEEN THE ANCHORAGE AND THE ANCHOR LENGTH.

3.5 ANCHOR HEAD

THE NUTS OR WEDGING DEVICE USED TO TRANSFER THE TENSION FROM THE PRESTRESSING STEEL TO THE BEARING PLATE.

3.6 BEARING PLATE INSULATION

THE BEARING PLATE INSULATION MATERIAL PLACED BETWEEN THE BEARING PLATE AND THE STRUCTURE BEARING SURFACE ELECTRICALLY INSULATES THE TENDON FROM THE STRUCTURE SO AS TO PREVENT GALVANIC ACTION.

3.7 BRACKET

A TRIANGULAR SHAPED STRUCTURAL ELEMENT THAT MAY BE REQUIRED TO TRANSFER THE LOAD FROM THE BASE PLATE TO THE STRUCTURE WHEN THE TENDON IS NOT PERPENDICULAR TO THE STRUCTURE.

3.8 ANCHORAGE COVER

THE ANCHORAGE COVER IS USED TO RETAIN CORROSION PROTECTION GREASE AROUND THE ANCHOR HEAD.

3.9 ANCHORAGE

THE ANCHOR HEAD, BEARING PLATE INSULATION, BEARING PLATE, BRACKET, ANCHORAGE COVER, AND OTHER ITEMS WHICH TRANSFER THE TENSILE FORCE IN THE PRESTRESSING STEEL TO THE STRUCTURE.

3.10 SHEATHING

ENCLOSURE AROUND THE UNBONDED LENGTH OF THE PRESTRESSING STEEL TO PREVENT THE PRESTRESSING STEEL FROM BONDING TO THE SURROUNDING GROUT AND TO PROVIDE CORROSION PROTECTION.

3.11 COATING (GREASE)

MATERIAL USED TO PROTECT AGAINST CORROSION AND/OR LUBRICATE THE PRESTRESSING STEEL IN THE UNBONDED LENGTH. ALSO USED TO PROTECT ANCHOR HEAD FROM CORROSION.

3.12 BITUMINOUS SEAL

THE BITUMINOUS SEAL IS USED TO SEAL THE SURFACES BETWEEN THE STRUCTURE, BEARING PLATE INSULATION, BEARING PLATE, AND THE ANCHOR HEAD SO AS TO PREVENT MOISTURE FROM REACHING AND CORRODING THE PRESTRESSING STEEL.

3.13 TRUMPET

THE TRUMPET CONSISTS OF ONE OR MORE PIPES. THE TRUMPET PROTECTS THE UPPER END OF THE TENDON.

3.14 ANCHOR GROUT (PRIMARY GROUT)

MATERIAL THAT IS INJECTED INTO THE TIEBACK HOLE TO COVER THE ANCHOR LENGTH OF THE TENDONS AND PROVIDE THE MEDIUM FOR TRANSMITTING THE TIEBACK LOAD TO THE GROUND WITHIN THE ANCHOR LENGTH.

3.15 SECONDARY GROUT

MATERIAL THAT IS INJECTED INTO THE TIEBACK HOLE TO COVER THE UNBONDED LENGTH OF THE TENDONS TO PROVIDE CORROSION PROTECTION.

3.16 JACKING LENGTH

THE LENGTH OF THE PRESTRESSING STEEL WHICH IS LOCATED ON THE JACKING SIDE OF THE FINAL ANCHOR HEAD POSITION AND IS TENSIONED DURING THE STRESSING OF THE TIEBACK.

3.17 UNBONDED TESTING LENGTH (STRESSING LENGTH)

THE SUM OF THE UNBONDED LENGTH AND THE JACKING LENGTH WHICH IS EQUAL TO THE LENGTH OF THE PRESTRESSING STEEL THAT IS FREE TO ELONGATE ELASTICALLY DURING STRESSING.

3.18 TIEBACK DESIGN LOAD

THE LOAD FOR WHICH THE TIEBACK IS DESIGNED. THE TIEBACK DESIGN LOAD IS THE ACTUAL TENSION FORCE ON THE TIEBACK THAT WILL PROVIDE EQUILIBRIUM TO THE WALL SYSTEM AT THE MAXIMUM LOADING CONDITION.

3.19 MAXIMUM PERMISSIBLE LOAD

THE MAXIMUM PERMISSIBLE LOAD IS THE MAXIMUM LOAD THAT MAY BE APPLIED TO THE TIEBACK DURING ANY STAGE OF THE WORK. THIS LOAD IS 1.33 TIMES THE TIEBACK DESIGN LOAD UNLESS A LOWER LOAD IS NOTED ON THE DRAWINGS.

3.20 PRELIMINARY LOADS

PRELIMINARY LOADS ARE LOADS, LESS THAN THE LOCK–OFF LOAD, THAT MAY BE REQUIRED DUE TO STAGED CONSTRUCTION. WHERE REQUIRED, PRELIMINARY LOADS ARE NOTED ON THE DRAWINGS.

3.21 PROOF LOAD

THE LARGEST LOAD APPLIED TO THE TIEBACK WHEN STRESSING THE TENDONS DURING A LOAD TEST. THIS LOAD IS A DEFINED PERCENTAGE INCREASE IN THE TIEBACK DESIGN LOAD.

3.22 LOCK–OFF LOAD (TRANSFER LOAD)

THE LOAD CARRIED BY THE TIEBACK AFTER COMPLETION OF TESTING AND/OR STRESSING.

3.23 ALIGNMENT LOAD

THE NOMINAL LOAD MAINTAINED ON A TIEBACK DURING TESTING TO ASSURE THAT THE TESTING EQUIPMENT REMAINS IN PROPER POSITION.

3.24 PROOF TEST

A TIEBACK LOAD TEST THAT REQUIRES THE APPLICATION OF DEFINED INCREMENTAL LOADS TO THE PRESTRESSING STEEL. THE MOVEMENT OF THE PRESTRESSING STEEL IS RECORDED AT EACH LOAD INCREMENT.

3.25 PERFORMANCE TEST

THIS LOAD TEST REQUIRES THE APPLICATION OF DEFINED INCREMENTAL LOADING AND UNLOADING OF THE PRESTRESSING STEEL. THE MOVEMENT OF THE PRESTRESSING STEEL IS RECORDED AT EACH LOADING AND UNLOADING INCREMENT. THE MAXIMUM LOAD APPLIED DURING THIS TEST IS MAINTAINED CONSTANT FOR A DEFINED TIME PERIOD WHILE MOVEMENTS ARE RECORDED.

3.26 CREEP TEST

THE LOADING AND UNLOADING INCREMENTS FOR THIS TEST ARE THE SAME AS USED FOR A PERFORMANCE TEST. THE MOVEMENT OF THE PRESTRESSING STEEL IS RECORDED AT EACH LOADING AND UNLOADING INCREMENT AND THE MOVEMENT OF THE PRESTRESSING STEEL IS ALSO RECORDED FOR A DEFINED EXTENDED TIME PERIOD WHILE MAINTAINING CERTAIN LOAD INCREMENTS.

3.27 CREEP MOVEMENT

THE TIME–DEPENDENT MOVEMENTS OF THE PRESTRESSING STEEL AT A CONSTANT LOAD.

3.28 CREEP CURVE

A SEMILOGARITHMIC PLOT OF THE CREEP MOVEMENT VERSUS TIME, WITH THE UNITS OF TIME PLOTTED ON THE LOGARITHMIC AXIS.

3.29 CREEP RATE

THE SLOPE OF THE CREEP CURVE PER LOG CYCLE OF TIME OVER THE FINAL DECADE OF THE OBSERVATION PERIOD.

STILSON & ASSOCIATES, INC.
CONSULTING ENGINEERING AND ARCHITECTURE
COLUMBUS AND CLEVELAND

GENERAL NOTES – 3
CITY OF CLEVELAND BRIDGE No. 4:021C
STOKES BLVD OVER NORFOLK & WESTERN R.R., CONRAIL & G.C.R.T.A.
CUYAHOGA COUNTY
STA. 15+20.88
STA. 17+08.70

DESIGNED	DRAWN	TRACED	CHECKED	REVIEWED	DATE	REVIEWED
W.M.	P.A.T.			G.W.M.	11/9/98	

Stokes 0031 (4:021) SFN: 1833936

ITEM SPECIAL – TIEBACKS, CONTINUED

4.0 MATERIALS

THE CONTRACTOR SHALL MAKE ARRANGEMENTS TO ACQUIRE THE TIEBACK SYSTEM AND ALL NECESSARY INCIDENTALS FOR CONSTRUCTION OF THE PROPOSED TIEBACKS.

4.1 BEARING PLATE INSULATION

THE BEARING PLATE INSULATION SHALL BE 1/8 INCH THICK UHMW PE "KOROLATH" BY KORO CORP. OR EQUAL AND SHALL HAVE THE SAME LENGTH AND WIDTH AS THE BEARING PLATE. IT SHALL NOT CREEP WHEN SUBJECTED TO THE DESIGN LOAD.

4.2 BITUMINOUS SEAL

THE BITUMINOUS SEAL SHALL CONFORM TO THE REQUIREMENTS OF 702.06, 702.09, OR 702.11.

4.3 WATERSTOP

THE WATERSTOP SHALL CONFORM TO ITEM 512, "WATER–STOP RX" BY AMERICAN COLLOID COMPANY OR APPROVED EQUAL.

4.4 BAR TYPE PRESTRESSING STEEL

STEEL BARS SHALL CONFORM TO ASTM A722, "UNCOATED HIGH–STRENGTH STEEL BARS FOR PRESTRESSED CONCRETE."

4.5 STRAND TYPE PRESTRESSING STEEL

A. THE STRAND SHALL CONFORM TO THE REQUIREMENTS OF ASTM A416, "UNCOATED SEVEN–WIRE STRESS–RELIEVED STEEL STRAND FOR PRESTRESSED CONCRETE;" OR

B. THE STRAND SHALL CONFORM TO COMPACTED STRAND REQUIREMENTS AS PER ASTM 779 "UNCOATED SEVEN–WIRE COMPACTED STRESS–RELIEVED STEEL STRAND FOR PRESTRESSED CONCRETE."

4.6 SHEATHING

THE SHEATH (BOND BREAKER) SHALL BE EITHER A POLYVINYL CHLORIDE (PVC), POLYETHYLENE, OR PROPYLENE PIPE OR TUBE. THE SHEATH MAY SURROUND AN INDIVIDUAL PRESTRESSING BAR OR STRAND OR THE SET OF PRESTRESSING BARS OR STRANDS. THE MATERIAL SHALL BE CAPABLE OF WITHSTANDING DAMAGE DURING SHIPPING, HANDLING, AND INSTALLATION. THE SHEATH SHALL HAVE A MINIMUM WALL THICKNESS OF 0.04 INCH. THE MATERIAL IS SUBJECT TO THE APPROVAL OF THE ENGINEER.

THE MATERIALS SHALL CONFORM TO THE FOLLOWING:

PVC	ASTM D1785
POLYETHYLENE	ASTM D1248
PROPYLENE	ASTM D4101

THE INSTALLED SHEATHING SHALL PERMIT AT LEAST 95 PERCENT OF THE TENDON FORCE TO BE TRANSMITTED TO THE ANCHOR LENGTH. THE SHEATHING SHALL HAVE A TENSILE STRENGTH EXCEEDING 3,000 POUNDS PER SQUARE INCH (PSI) AS DETERMINED BY ASTM D638 AND AN IZOD IMPACT STRENGTH EXCEEDING 4 FOOT–POUNDS PER INCH AS DETERMINED BY ASTM D256A.

4.7 COATING

THE COATING SHALL PROVIDE BOTH CORROSION INHIBITING PROPERTIES AND LUBRICATING PROPERTIES CONFORMING TO THE FOLLOWING CRITERIA:

TEST	TEST METHOD	ACCEPTANCE CRITERIA
A. DROPPING POINT, °F (°C)	ASTM D566 OR ASTM D2265	MINIMUM 300 (148.9)
B. OIL SEPARATION @ 160°F (71.1°C), % BY WEIGHT	FTMS 791B METHOD 321.1	MAXIMUM 0.5
C. WATER, % MAXIMUM	ASTM D95	0.1
D. FLASH POINT, °F (°C) (REFERS TO OIL COMPONENT)	ASTM D92	MINIMUM 300 (148.9)
E. CORROSION TEST, 5% SALT FOG @ 100°F (37.8°C), 5 MILS, MIN HOURS (Q PANEL, TYPE S)	ASTM B117	FOR NORMAL ENVIRONMENTS: RUST GRADE 7 OR BETTER AFTER 720 HOURS OF EXPOSURE ACCORDING TO ASTM D610. FOR CORROSIVE ENVIRONMENTS: RUST GRADE 7 OR BETTER AFTER 1000 HOURS OF EXPOSURE ACCORDING TO ASTM D610.
F. WATER SOLUBLE IONS:		
1) CLORIDES, PPM MAX.	ASTM D512	10
2) NITRATES, PPM MAX.	ASTM D922	10
3) SULFIDES, PPM MAX.	APHA 427D (15th ED.)	10
G. SOAK TEST, 5% SALT FOG @ 100°F (37.8°C), 5 MILS COATING, A PANELS, TYPE S (MODIFIED). IMMERSE PANELS 50% IN A 5% SALT SOLUTION AND EXPOSE TO SALT FOG.	ASTM D992	NO EMULSIFICATION OF THE COATING AFTER 720 HOURS OF EXPOSURE.
H. COMPATABILITY WITH SHEATHING:		
1) HARDNESS AND VOLUME CHANGE OF POLYMER AFTER EXPOSURE TO GREASE, 40 DAYS @ 150°F.	ASTM D4289	PERMISSIBLE CHANGE IN HARDNESS: 15% PERMISSIBLE CHANGE IN VOLUME: 10%
2) TENSILE STRENGTH CHANGE OF POLYMER AFTER EXPOSURE TO GREASE, 40 DAYS @ 150°F.	ASTM D638	PERMISSIBLE CHANGE IN TENSILE STRENGTH: 30%

4.8 BEARING PLATE

THE BEARING PLATE SHALL CONFORM TO REQUIREMENTS OF 711.

4.9 ANCHOR HEAD

THE ANCHOR HEAD SHALL BE THE STANDARD PRODUCT OF THE TENDON MANUFACTURER AND CONFORM TO THE REQUIREMENTS OF 711. IT SHALL BE CAPABLE OF TRANSFERRING 100 PERCENT OF THE GUARANTEED ULTIMATE TENSILE STRENGTH (GUTS) FROM THE TENDON TO THE BEARING PLATE.

4.10 CENTRALIZERS

CENTRALIZERS SHALL BE FABRICATED FROM A STEEL OR PLASTIC MATERIAL THAT IS NONDETRIMENTAL TO THE PRESTRESSING STEEL.

4.11 SPACERS

SPACERS SHALL BE FABRICATED FROM A STEEL OR PLASTIC MATERIAL THAT IS NONDETRIMENTAL TO THE PRESTRESSING STEEL. THEY SHALL SEPARATE THE TENDONS SO AS TO ASSURE BOND BETWEEN THE TENDONS AND THE GROUT IN THE ANCHOR LENGTH.

4.12 GROUT (ANCHOR, SECONDARY, AND INCIDENTAL)

THE CEMENT FOR THE GROUT SHALL BE TYPE I, TYPE II, OR TYPE II CONFORMING TO ASTM C150. THE GROUT SHALL CONFORM TO ALL APPLICABLE REQUIREMENTS OF 499. GROUT ADDITIVES SHOULD BE AVOIDED. CHEMICAL ADDITIVES WHICH CAN CONTROL, BLEED, AND/OR RETARD SET MAY BE USED IN THE ANCHOR GROUT AS DIRECTED BY THE ENGINEER.

4.13 TRUMPET

THE TRUMPET SHALL BE MADE OF SCHEDULE 40 GALVANIZED STEEL PIPE CONFORMING TO THE REQUIREMENTS OF 707.11. THE MINIMUM TRUMPET LENGTH SHALL BE AS SHOWN ON THE PLANS. THE LENGTH AND DIAMETER SHALL BE SUFFICIENT FOR THE SPLAY OF THE TENDONS. THE TRUMPET SHALL PROVIDE A WATERTIGHT PROTECTION FOR THE TENDON. THE PART OF THE TRUMPET NOT FILLED WITH GROUT SHALL BE FILLED WITH GREASE.

4.14 ANCHORAGE COVER

THE ANCHORAGE COVER SHALL BE GALVANIZED STEEL. THE COVER CAN BE A STANDARD PRODUCT OF THE TENDON MANUFACTURER OR FABRICATED IN ACCORDANCE WITH ITEM 711.

4.15 CAPSULE

THE ENCAPSULATION MATERIAL SHALL BE A CORRUGATED PLASTIC TUBE IN THE ANCHOR LENGTH AND SMOOTH PLASTIC TUBE IN THE UNBONDED LENGTH. CORRUGATED PLASTIC TUBE SHALL CONFORM TO THE SAME REQUIREMENTS AS IN 4.6. THE CAPSULE SHALL BE:

A. RESISTANT TO CHEMICAL ATTACK FROM AGGRESSIVE ENVIRONMENTS, GROUT, OR GREASE.

B. FABRICATED FROM MATERIALS NONDETRIMENTAL TO THE TENDON.

C. CAPABLE OF WITHSTANDING ABRASION, IMPACT, AND BENDING DURING HANDLING AND ISTALLATION.

D. FREE OF FLAWS WHICH WOULD PERMIT WATER TO ENTER INTO THE TIEBACK SYSTEM.

E. CAPABLE OF TRANSFERRING STRESSES FROM THE GROUT INSIDE THE CAPSULE TO THE GROUT OUTSIDE THE CAPSULE.

4.16 SEAL

THE SEALS SHALL BE RESILIENT NEOPRENE RUBBER "O" RINGS OR APPROVED EQUAL.

5.0 DESIGN REQUIREMENTS

THE CONTRACTOR SHALL BE RESPONSIBLE FOR DETERMINING THE TYPE (BAR OR STRAND) AND SIZE OF THE TENDONS TO BE USED, AND THE BOND LENGTH NECESSARY TO DEVELOP ADEQUATE LOAD CAPACITY TO SATISFY ANCHOR TESTING ACCEPTANCE CRITERIA FOR THE DESIGN LOAD SPECIFIED FOR EACH ANCHOR. THE DRILLED ANCHOR HOLE SHALL NOT EXTEND OUTSIDE THE RIGHT–OF–WAY LIMITS SHOWN ON THE PLANS. THE CONTRACTOR SHALL USE HIS EXPERTISE TO DETERMINE THE DRILLING METHOD, GROUT PRESSURES, MULTIPLE GROUTING TECHNIQUES, BOND LENGTHS, AND TESTING SETUP, AS PER THE REQUIREMENTS AND LIMITATIONS DEFINED IN THESE SPECIAL PROVISIONS OR ON THE PLANS.

5.1 FREE LENGTH

EACH TIEBACK SHALL HAVE A FREE LENGTH THAT IS NOT LESS THAN THAT SHOWN ON THE PLANS.

5.2 BOND LENGTH

THE CONTRACTOR SHALL DETERMINE THE TOTAL LENGTH NECESSARY TO SATISFY ANCHOR TESTING ACCEPTANCE CRITERIA. THE BOND LENGTH OF THE ANCHOR SHALL NOT BE LESS THAN THAT SHOWN ON THE PLANS.

5.3 DESIGN LOAD (P)

THE DESIGN LOAD (P) FOR EACH TIEBACK IS SHOWN ON THE PLANS. THE CONTRACTOR SHALL STRESS EACH ANCHOR IN ACCORDANCE WITH THE PROCEDURES SPECIFIED TO PROVIDE THE REQUIRED DESIGN LOAD RESISTANCE AT EACH TIEBACK.

5.4 TENDON

THE TENDON SHALL BE SIZED SUCH THAT THE MAXIMUM PERMISSIBLE LOAD DOES NOT EXCEED 80 PERCENT OF THE GUARANTEED ULTIMATE STRENGTH (GUTS) OF THE TENDON. THE CONTRACTOR SHALL NOT IMPOSE ANY ADDITIONAL SURCHARGE LOAD ON THE TENDONS THAT CAN INCREASE THE TENDON TENSION BEYOND 80 PERCENT OF THE GUARANTEED ULTIMATE STRENGTH (GUTS).

5.5 ANCHORAGE

THE PHYSICAL DIMENSIONS OF THE ANCHORAGE COMPONENTS SHALL BE AS SHOWN ON THE PLANS. THE ANCHORAGE SYSTEM SHALL BE SUITABLE FOR TRANSFERRING THE TENSION FORCE IN THE TENDON TO THE STRUCTURE. THE ULTIMATE CAPACITY OF THE ANCHORAGE SHALL NOT BE LESS THAN 95 PERCENT OF THE GUARANTEED ULTIMATE STRENGTH (GUTS) OF THE TENDON.

5.6 GROUT MIX DESIGN

THE CONTRACTOR SHALL PROVIDE THE ENGINEER WITH THE PROPOSED GROUT MIX DESIGN AND SHALL INCLUDE DOCUMENTATION WHICH INDICATES THAT THE PROPOSED MIX WILL DEVELOP A 7–DAY COMPRESSIVE STRENGTH WHICH IS GREATER THAN 3500 P.S.I. (AASHTO T 106).

GENERALLY, STRENGTH TESTING OF THE GROUT WILL NOT BE REQUIRED DURING CONSTRUCTION OF THE TIEBACKS BECAUSE PROOF–TESTING OF THE ANCHORS WILL VERIFY THE PERFORMANCE OF THE GROUT AS PART OF THE TIEBACK SYSTEM. THE ENGINEER MAY REQUEST THAT THE CONTRACTOR PERFORM COMPRESSION TESTS ON GROUT SAMPLES OBTAINED FROM THE INITIAL INSTALLATION OF THE ANCHORS. COMPRESSION STRENGTH TESTS WILL BE REQUIRED IF ADDITIONAL ADMIXTURES ARE USED OR IRREGULARITIES OCCUR IN GROUT CONSISTENCY AND/OR TIEBACK TESTING.

5.7 TENDON FABRICATION

A. TENDONS SHALL BE SHOP FABRICATED. THE BOND LENGTH SHALL BE CLEAN, BARE PRESTRESSING STEEL WHICH WILL BE CENTRALIZED AND COVERED WITH GROUT IN THE CAPSULE (DOUBLE CORROSION PROTECTION). THE FREE LENGTH OF THE TENDON SHALL HAVE THE COATING AND SHEATH INSTALLED AT THE SHOP. THE CORROSION INHIBITTING COATING SHALL FILL ALL VOID SPACE WITHIN THE SHEATHING AND BETWEEN WIRES. STRAND–TYPE TENDONS ARE TO BE EXTRUSION COATED.

B. TENDONS SHALL BE STORED AND HANDLED IN SUCH A MANNER AS TO AVOID DAMAGE OR CORROSION.

C. PRESTRESSING STEEL SHALL BE PROTECTED FROM DIRT, RUST, OR DELETERIOUS SUBSTANCES. (A LIGHT COATING OF RUST ON THE STEEL WILL NOT AFFECT THE FUNCTION OF THE TENDON.) CORROSION OR PITTING IS CAUSE FOR TENDON REJECTION. IF THE ENGINEER IS UNCERTAIN ABOUT THE EXTENT OF THE CORROSION, THE STEEL SHALL BE TESTED TO DETERMINE IF THE TENDON STILL MEETS THE APPROPRIATE ASTM REQUIREMENTS AS GIVEN IN THESE SPECIAL PROVISIONS.

6 / 23

STILSON & ASSOCIATES, INC.
CONSULTING ENGINEERING AND ARCHITECTURE
COLUMBUS AND CLEVELAND

GENERAL NOTES – 4
CITY OF CLEVELAND BRIDGE No. 4:021C
STOKES BLVD OVER NORFOLK & WESTERN R.R., CONRAIL & G.C.R.T.A.

CUYAHOGA COUNTY STA. 15+20.88 STA. 17+08.70

DESIGNED	DRAWN	TRACED	CHECKED	REVIEWED	DATE	REVIEWED
W.M.	P.A.T.			G.W.M.	11/9/98	

Stokes 0031 (4:021) SFN: 1833936

ITEM SPECIAL – TIEBACKS, CONTINUED

5.8 COUPLER

COUPLER TYPE AND LOCATION SHALL BE AS APPROVED BY THE ENGINEER. THE ULTIMATE CAPACITY OF THE COUPLER SHALL NOT BE LESS THAN THE GUTS OF THE PRESTRESSING STEEL.

5.9 ELECTRICAL INSULATION

THE PRESTRESSING STEEL AND ANCHORAGE SHALL BE ELECTRICALLY INSULATED FROM THE TRUMPET AND THE WALL OR CAISSON. THIS INSULATION SHALL INCLUDE:

A. BEARING PLATE INSULATION UNDER THE ANCHORAGE PLATE;

B. THE SHEATHING;

C. THE COATING; AND

D. OTHER FEATURES REQUIRED TO PREVENT GALVANIC ACTION.

5.10 BEARING PLATE

IN COMPLIANCE WITH THE DESIGN STANDARDS, THE BEARING PLATE SHALL BE CAPABLE OF TRANSFERRING 100 PERCENT OF GUTS FROM THE ANCHOR HEAD TO THE STRUCTURE. ONLY BEARING AREA OUTSIDE OF OUTER DIAMETER OF THE TRUMPET SHALL BE CONSIDERED TO CARRY LOAD. THE BEARING PLATE SHALL HAVE SUFFICIENT THICKNESS SO AS TO BE CAPABLE OF SPANNING FROM THE ANCHOR HEAD TO THE BEARING SURFACE BEYOND THE TRUMPET.

5.11 TRUMPET

THE TRUMPET SHALL BE DESIGNED TO PROTECT THE UPPER END OF THE PRESTRESSING STEEL FROM MECHANICAL DAMAGE, RETAIN THE CORROSION PREVENTING GREASE WITHIN THE TRUMPET, AND ACCOMMODATE MOVEMENT.

5.12 SEAL

TWO SEALS SHALL BE PROVIDED TO ACT WITH THE TRUMPET SO AS TO PREVENT MOISTURE FROM ENTERING THE END OF THE TRUMPET AND TO PREVENT LOSS OF GREASE. THE SEALS SHALL ACCOMMODATE THE SPECIFIED MOVEMENT. DURING THIS MOVEMENT, THE DISPLACEMENT OF THE INCOMPRESSIBLE GREASE MAY CAUSE LARGE DISPLACEMENTS OF THE SEAL DUE TO HYDRAULIC ACTION. THIS MOVEMENT SHALL NOT IMPAIR THE FUNCTION OF THE SEALS.

6.0 INSTALLATION

6.1 DRILLING

AUGER DRILLING, ROTARY DRILLING, OR PERCUSSION DRIVEN CASING MAY BE USED TO INSTALL THE TIEBACK SYSTEM. THE SPECIALTY CONTRACTOR SHALL DETERMINE THE APPROPRIATE INSTALLATION METHODS. THE CENTERLINE OF THE HOLE FOR THE TENDON SHALL BE LOCATED WITHIN 3 INCHES OF THE PLAN LOCATION. NO WATER MAY BE USED IN DRILLING.

6.2 TENDON

THE TENDON SHALL BE CENTRALIZED AND SECURED INSIDE THE CORRUGATED CAPSULE. A LEAKPROOF TRANSITION SHALL BE PROVIDED BETWEEN THE BONDED LENGTH CAPSULE AND THE FREE LENGTH CAPSULE. A HEAT SHRINKABLE SLEEVE, OR ANOTHER SUITABLE SPLICE, SUBJECT TO THE APPROVAL OF THE ENGINEER, SHALL BE USED.

CENTRALIZERS SHALL POSTITION THE TENDON IN THE DRILL HOLE SUCH THAT A MINIMUM OF 0.5 INCHES OF GROUT COVER OUTSIDE THE CAPSULE AND AN AVERAGE OF NO LESS THAN 0.2 INCHES OF GROUT BETWEEN THE CAPSULE AND THE TENDON IS PROVIDED FOR THE FULL BOND LENGTH OF THE TENDON. THE SPACING OF THE CENTRALIZERS SHALL NOT EXCEED 10 FEET. SPACERS SHALL BE USED TO SEPARATE ELEMENTS OF MULTI–ELEMENT TENDONS. A COMBINATION CENTRALIZER–SPACER MAY BE USED.

6.3 GROUTING

THE GROUT SHALL BE INSTALLED BY A POSITIVE DISPLACEMENT GROUT PUMP. THE PUMP SHALL BE EQUIPPED WITH A PRESSURE GAUGE WHICH CAN MONITOR THE GROUT PRESSURE. (NOTE THE LENGTH OF HOSE USED TO INSTALL GROUT WILL AFFECT THE GROUT PRESSURE IN THE TIEBACK SYSTEM.)

PROVISIONS SHALL BE TAKEN TO PREVENT GROUT FROM BEING PUMPED INTO THE EXISTING OR PROPOSED DRAINAGE SYSTEMS.

THE GROUTING EQUIPMENT SHALL BE SIZED TO ENABLE THE TIEBACK TO BE GROUTED IN ONE CONTINUOUS OPERATION. NEAT CEMENT GROUTS SHOULD BE SCREENED TO REMOVE LUMPS. THE MAXIMUM SIZE OF THE SCREEN OPENINGS SHALL BE 0.250 INCH. MIXING AND STORAGE TIMES SHOULD NOT CAUSE EXCESSIVE TEMPERATURE BUILD–UP IN THE GROUT. THE MIXER SHOULD BE CAPABLE OF CONTINUOUSLY AGITATING THE GROUT.

THE ANCHOR GROUT SHALL BE INJECTED FROM THE LOWEST POINT OF THE TIEBACK AND COVER A MINIMUM OF 2 FEET OF THE LOWER END OF THE SHEATHING. THE ANCHOR GROUT SHALL BE PLACED IN ONE OPERATION. THE GROUT MAY BE PLACED USING GROUT TUBES, CASING, OR DRILL RODS.

THE REMAINDER OF THE DRILLED HOLE SHALL BE FILLED WITH SECONDARY GROUT. THIS GROUT SHALL EXTEND INTO THE TRUMPET TO WITHIN 6 INCHES OF THE BEARING PLATE AND AS SHOWN ON THE PLANS.

THE GROUT CAN BE PLACED BEFORE OR AFTER INSERTION OF THE TENDONS. THE QUANTITY OF THE GROUT AND THE GROUT PRESSURES SHALL BE RECORDED. THE GROUT PRESSURES AND GROUT TAKES SHALL BE CONTROLLED TO PREVENT EXCESSIVE GROUND HEAVE.

THE TIEBACK SHALL REMAIN UNDISTURBED UNTIL GROUT HAS CURED AS SPECIFIED IN 8.0.

6.4 WELDING

SUITABLE PRECAUTIONS SHALL BE TAKEN DURING ALL WELDING OPERATIONS TO PREVENT DAMAGE TO THE PRESTRESSING STEEL AND SHALL BE AT THE DIRECTION OF THE ENGINEER.

6.5 TRUMPET

A TRUMPET SHALL BE USED TO MAKE THE TRANSITION FROM THE BEARING PLATE TO THE PROTECTION OVER THE TENDON. IT SHALL EXTEND 6 INCHES BEYOND EXISTING OR PROPOSED DRAINAGE SYSTEM. TWO TIGHT FITTING SEALS SHALL BE PROVIDED THAT WILL PREVENT LOSS OF THE GREASE FROM THE TRUMPET AND ENTRANCE OF WATER INTO THE TRUMPET, BUT PERMIT THE REQUIRED MOVEMENT.

6.6 ANCHORAGE PROTECTION

6.6.1 GENERAL

THE ANCHORAGES SHALL BE PROTECTED FROM RUST, MECHANICAL DAMAGE, AND VANDALISM.

6.6.2 BITUMINOUS SEAL

APPLY BITUMINOUS SEAL TO THE BOTTOM OF THE BEARING PLATE INSULATION, BOTTOM OF THE BEARING PLATE, AND THE BOTTOM OF THE ANCHOR HEAD SO AS TO SEAL THE SURFACE BETWEEN THE STRUCTURE AND BEARING PLATE INSULATION, THE SURFACE BETWEEN THE BEARING PLATE INSULATION AND THE BEARING PLATE, AND THE SURFACE BETWEEN THE BEARING PLATE AND THE ANCHOR HEAD. AFTER FINAL LOCKOFF, COAT EXPOSED ANCHORAGE WITH A 20 MIL DRY FILM THICKNESS OF BITUMINOUS SEAL.

6.6.3 ANCHORAGE COVER

A GREASE FILLED ANCHORAGE COVER SHALL BE INSTALLED OVER ALL ANCHOR HEADS AND ATTACHED SO AS NOT TO BE DISLODGED.

6.6.4 ANCHORAGE ENCASEMENT

THE ANCHORAGE SHALL BE ENCASED IN CONCRETE THAT IS SECURELY ATTACHED TO THE PIER AND PROVIDES A MINIMUM OF 3 INCHES OF CONCRETE COVER OVER THE ANCHORAGE.

6.7 COUPLING

IF A COUPLING IS USED WITHIN THE UNBONDED LENGTH, IT SHALL BE ENCLOSED IN A GREASE FILLED LARGER DIAMETER SHEATH THAT EXTENDS BEYOND THE COUPLING AND IS SEALED AND TAPED TO THE SHEATHING WITH WATERPROOF TAPE.

6.8 TIEBACK ANGLE

THE TIEBACKS SHALL BE INSTALLED AT THE LOCATION AND ANGLE SHOWN ON THE PLANS EXCEPT AS DIRECTED OTHERWISE BY THE ENGINEER. THE TIEBACK TOLERANCES ARE ±3 INCHES FOR THE VERTICAL AND HORIZONTAL DIRECTIONS AND ±3 DEGREES FOR THE ANGLE. IF THE CONTRACTOR DESIRES A CHANGE IN THE PLAN ANGLE, THE DESIGN LOAD SHALL BE ADJUSTED SO THAT THE HORIZONTAL FORCE CONPONENT REMAINS THE SAME AS THE PLAN VALUE. THE PLAN TIEBACK ANGLE CAN ONLY BE CHANGED UPON APPROVAL OF THE ENGINEER. GENERALLY, TIEBACK ANGLES ARE BETWEEN 15 AND 30 DEGREES.

7.0 DISTRIBUTION BEAM

THE DISTRIBUTION BEAM CONSISTS OF STRUCTURAL STEEL CHANNELS ARRANGED AS SHOWN IN THE PLANS TO ALLOW PASSAGE OF THE ANCHOR AND ENCASED IN REINFORCED CONCRETE. THE FUNCTION OF THE BEAM IS TO DISTRIBUTE THE ANCHOR LOAD TO THE EXISTING PIER WALL. THE CONTRACTOR SHALL SIZE THE CHANNELS TO PROVIDE SUFFICIENT STRENGTH AND STIFFNESS TO ASSURE DISTRIBUTION OF THE ANCHOR LOADS TO THE FULL WIDTH OF THE PIER WALL. NECESSARY ADDITIONAL DETAILS REQUIRED FOR THE DISTRIBUTION BEAM SHALL BE DESIGNED BY THE CONTRACTOR AND INCLUDED WITH HIS DESIGN PROPOSAL.

7.1 DESIGN DATA

CONCRETE: CLASS C – COMPRESSIVE STRENGTH 4,000 P.S.I.
REINFORCING STEEL: ASTM A615, A616, OR A617 – GRADE 60, YIELD STRENGTH 60,000 P.S.I.
STRUCTURAL STEEL: ASTM A36, A572 GRADES 42 THROUGH 50, OR A709 GRADES 36 THROUGH 50 – UNIT STRESS 20,000 P.S.I.

7.2 MATERIALS AND INSTALLATION

CONCRETE SHALL BE CLASS C IN ACCORDANCE WITH CMS 511. REINFORCING STEEL SHALL BE IN ACCORDANCE WITH CMS 509.

DOWEL HOLES SHALL BE AS PER ITEM 510 AND ANCHORED USING 705.20 EPOXY GROUT.

STRUCTURAL STEEL SHALL BE IN ACCORDANCE WITH SS 863, LEVEL ONE (1) FABRICATION.

7.3 PAYMENT

COST OF ALL MATERIAL, LABOR, AND EQUIPMENT NECESSARY TO PROVIDE AND INSTALL THE DISTRIBUTION BEAM IN ACCORDANCE WITH THE PLANS AND THESE SPECIFICATIONS SHALL BE INCLUDED IN THE LUMP SUM PRICE BID FOR ITEM SPECIAL – TIEBACKS.

8.0 SUBMITTALS

THE CONTRACTOR SHALL SUBMIT HIS PROPOSED TIEBACK SYSTEM TO THE DIRECTOR FOR REVIEW. THE TIEBACK SYSTEM SUBMISSION SHALL CONSIST OF DETAILS REQUIRED TO COMPLETELY DESCRIBE THE TIEBACK SYSTEM AND SHALL INCLUDE THE FOLLOWING:

A. SHOP DRAWINGS SHALL BE FURNISHED AS PER ALL APPLICABLE REQUIREMENTS OF 501.05.

B. MANUFACTURER'S LITERATURE FOR ALL MATERIALS TO BE USED.

C. ALL REQUIRED MATERIAL PROPERTIES SHALL BE FURNISHED.

D. ALL DIMENSIONS AND ANY ADDITIONAL DETAILS NOT SHOWN ON THE PLANS SHALL BE SHOWN.

E. DESCRIPTION OF THE SEQUENCE OF CONSTRUCTION.

F. THE PROPOSED GROUT MIX DESIGN.

G. DRAWINGS INDICATING SPECIFICS SUCH AS TENDON TYPE, TENDON CAPACITY, ANCHORAGE DETAILS INCLUDING CONCRETE ENCASEMENT, CORROSION PROTECTION DETAILS, THE PROPOSED INSTALLATION METHOD, AND SHOP AND FIELD WELDING DETAILS. GIVE COUPLER TYPE, LOCATION, AND SHEATHING DETAILS.

H. DESIGN CALCULATIONS OF ALL ELEMENTS OF THE TIEBACK SYSTEM.

I. REPAIR CRITERIA FOR DAMAGED SHEATHING MATERIAL IF FIELD REPAIR IS TO BE ATTEMPTED.

THE CONTRACTOR IS NOT AUTHORIZED TO ORDER ANY OF THE TIEBACK SYSTEM COMPONENTS PRIOR TO RECEIVING APPROVAL FROM THE DIRECTOR OF HIS DESIGN FOR THE TIEBACK SYSTEM. THE CONTRACTOR CAN EXPECT THE REVIEW TIME PERIOD BY THE DIRECTOR TO TAKE NO MORE THAN 50 CALENDAR DAYS. THE CONTRACTOR SHALL NOT BEGIN THE INSTALLATION OF THE TIEBACK SYSTEM UNTIL AFTER HE HAS RECEIVED WRITTEN APPROVAL FROM THE DIRECTOR.

9.0 TESTING

A CALIBRATED HYDRAULIC JACK AND PUMP SHALL BE USED TO LOAD THE TENDONS. THE JACK AND PUMP SHALL BE CALIBRATED AS A UNIT. THE CONTRACTOR SHALL SUBMIT THE CALIBRATION CURVE TO THE ENGINEER FOR APPROVAL PRIOR TO PERFORMING ANY TESTS. THE LOAD CELL SHALL BE USED IN TANDEM WITH THE JACK ON AT LEAST THE FIRST TWO TIEBACKS TESTED AND ON A MINIMUM OF FIVE PERCENT OF REMAINING TIEBACKS. EACH LOAD INCREMENT SHALL BE TOTALLY APPLIED IN LESS THAN 30 SECONDS AFTER THE JACK PUMP IS STARTED. ALL OBSERVATION TIME PERIODS BEGIN WHEN THE JACK PUMP IS STARTED. THE TOTAL AND CREEP MOVEMENTS OF THE ANCHOR SHALL BE MEASURED TO THE NEAREST 0.001 INCH WITH A DIAL GAUGE. THE GAUGE SHALL BE SUPPORTED ON A REFERENCE INDEPENDENT OF THE STRUCTURE.

ALL JACKS, PUMPS, LOAD CELLS, DIAL GAUGES, AND OTHER INSTRUMENTS USED TO MEASURE LOAD AND DEFLECTION OF THE TIEBACK SYSTEM SHALL BE ACCOMPANIED BY DOCUMENTED VERIFICATION OF THE CALIBRATION OF THE GAUGES AND DEVICES. THE CALIBRATION SHALL HAVE BEEN OBTAINED WITHIN THE PAST YEAR AND SHALL HAVE BEEN VERIFIED BY A RELIABLE TESTING AGENCY EQUIPPED TO DO THE REQUIRED CALIBRATING. THE ENGINEER SHALL BE FURNISHED WITH ALL APPROPRIATE DOCUMENTATION.

IN NO CASE MAY A LOAD BE APPLIED TO THE TIEBACK THAT EXCEEDS THE MAXIMUM PERMISSIBLE LOAD.

EACH TIEBACK SYSTEM SHALL BE TESTED AS STATED HEREIN AND AS DIRECTED BY THE ENGINEER. CREEP TESTS SHALL BE CONDUCTED ON THE FIRST TWO TIEBACKS INSTALLED. A PERFORMANCE TEST SHALL BE CONDUCTED ON THE THIRD AND FOURTH TIEBACKS THAT ARE INSTALLED AND ON AT LEAST 7 PERCENT OF THE REMAINING TIEBACKS. ALL TIEBACKS WHICH ARE NOT CREEP TESTED OR PERFORMANCE TESTED SHALL BE PROOF TESTED. TESTING SHALL NOT BE PERFORMED ON ANY TIEBACK UNTIL AFTER THE ANCHOR GROUT HAS CURED FOR 7 DAYS, UNLESS OTHERWISE APPROVED BY THE ENGINEER. TIEBACKS WHICH ARE TESTED AND DO NOT SATISFY THE TESTING ACCEPTANCE CRITERIA SHALL BE SUBJECT TO 10.0 AND SHALL NOT BE PERMITTED TO BE REGROUTED OR RETESTED ONCE THE INITIAL TESTING HAS BEEN PERFORMED.

9.1 FAILURE TEST

THE CONTRACTOR SHALL INSTALL ONE TIEBACK WHICH IS NOT ONE OF THE PLAN PRODUCTION TIEBACKS AND TEST THE TIEBACK SYSTEM TO FAILURE. THIS FAILURE TEST SHALL BE CONDUCTED ANY TIME AFTER THE FIRST TWO CREEP TESTS ARE COMPLETE AND PRIOR TO INSTALLING NO MORE THAN 11 PRODUCTION ANCHORS. THE CONTRACTOR SHALL DESIGN THIS ADDITIONAL TIEBACK SYSTEM SUCH THAT THE ANCHOR LENGTH IS SIMILAR TO AND INSTALLED THE SAME AS THE PRODUCTION TIEBACKS. THE CONTRACTOR SHALL INSTALL THIS ADDITIONAL TIEBACK AT A LOCATION THAT IS SATISFACTORY TO THE ENGINEER. THE LOCATION OF THIS ADDITIONAL ANCHOR SHALL BE SUCH THAT DAMAGE IS NOT INFLICTED UPON THE PROPOSED RETAINING WALL OR THE EXISTING ADJACENT PROPERTIES. THIS ADDITIONAL TIEBACK SHALL INCLUDE THE APPROPRIATE CORROSION PROTECTIONS AND SHALL PROVIDE AN ADEQUATE TENDON CAPACITY SUCH THAT ANCHOR FAILURE CAN BE ATTAINED PRIOR TO THE TENDON REACHING 80 PERCENT OF GUTS.

6A/23

STILSON & ASSOCIATES, INC.
CONSULTING ENGINEERING AND ARCHITECTURE
COLUMBUS AND CLEVELAND

GENERAL NOTES – 5
CITY OF CLEVELAND BRIDGE No. 4:021C
STOKES BLVD OVER NORFOLK & WESTERN R.R., CONRAIL & G.C.R.T.A.

CUYAHOGA COUNTY STA. 15+20.88 STA. 17+08.70

DESIGNED	DRAWN	TRACED	CHECKED	REVIEWED DATE	REVIEWED
W.M.	P.A.T.			G.W.M. 11/9/98	

Stokes 0031 (4:021) SFN: 1833936

ITEM SPECIAL – TIEBACKS, CONTINUED

9.2 CREEP TESTS

CREEP TESTS SHALL BE CONDUCTED BY INCREMENTALLY LOADING, HOLDING THE LOAD, MEASURING MOVEMENT, AND UNLOADING THE TIEBACK AND RECORDING THE MOVEMENTS WITH THE FOLLOWING LOAD SEQUENCE:

P = TIEBACK DESIGN LOAD FOR PRODUCTION ANCHOR.

AL= ALIGNMENT LOAD WHICH IS NORMALLY BETWEEN 2 AND 10 PERCENT OF THE DESIGN LOAD.

1.	AL	16.	0.25P
2.	0.25P	17.	0.50P
3.	AL	18.	0.75P
4.	0.25P	19.	1.00P
5.	0.50P	20.	1.20P
6.	AL	21.	AL
7.	0.25P	22.	0.25P
8.	0.50P	23.	0.50P
9.	0.75P	24.	0.75P
10.	AL	25.	1.00P
11.	0.25P	26.	1.20P
12.	0.50P	27.	1.33P
13.	0.75P	28.	1.20P
14.	1.00P	29.	1.00P
15.	AL	30.	LOCK–OFF AT 0.9P TO 1.0P.

LOADINGS 2, 5, 9, 14, 20, AND 27 SHALL BE MAINTAINED CONSTANT FOR THE FOLLOWING HOLDING PERIODS RESPECTIVELY: 10, 30, 30, 45, 60, AND 300 MINUTES. ALL OTHER LOADS SHALL BE HELD UNTIL MOVEMENT STABILIZES (APPROXIMATELY 1 MINUTE). DURING THE HOLDING PERIODS, THE MOVEMENTS SHALL BE RECORDED AT EACH OF THE FOLLOWING ELAPSED TIMES: 0, 1, 2, 3, 4, 5, 6, 10, 15, 20, 25, 30, 45, 60, 75, 100, 120, 150, 180, 210, 240, 270, AND 300 MINUTES.

CARE MUST BE TAKEN TO ASSURE THAT THE APPLIED LOADS ARE MAINTAINED CONSTANT DURING THE HOLDING PERIODS. A LOAD CELL SHALL BE USED TO MONITOR THE APPLIED LOADS DURING THE HOLDING PERIODS. THE TOTAL MOVEMENT AND RESIDUAL ANCHOR MOVEMENT SHALL BE PLOTTED AS A FUNCTION OF LOAD. A CREEP CURVE SHOWING THE CREEP MOVEMENT FOR EACH LOAD INCREMENT SHALL BE PLOTTED AS A FUNCTION OF THE LOGARITHM OF TIME.

THE CREEP TESTED TIEBACK IS ACCEPTABLE IF: THE MEASURED ELASTIC MOVEMENTS EXCEED 80 PERCENT OF THE THEORETICAL ELONGATION OF THE UNBONDED LENGTH PLUS THE JACKING LENGTH AT THE MAXIMUM TEST LOAD; AND THE CREEP CURVE PLOTTED FROM THE MOVEMENT DATA INDICATES A CREEP RATE OF LESS THAN 0.08 INCH PER LOG CYCLE OF TIME (I.E. BETWEEN 30 AND 300 MINUTES), REGARDLESS OF THE TENDON LENGTH OR LOAD.

9.3 PERFORMANCE TEST

PERFORMANCE TESTS SHALL BE CONDUCTED BY INCREMENTALLY LOADING THE UNLOADING THE TIEBACK AND RECORDING THE MOVEMENTS WITH THE FOLLOWING LOADING SEQUENCE:

1.	AL	16.	0.25P
2.	0.25P	17.	0.50P
3.	AL	18.	0.75P
4.	0.25P	19.	1.00P
5.	0.50P	20.	1.20P
6.	AL	21.	AL
7.	0.25P	22.	0.25P
8.	0.50P	23.	0.50P
9.	0.75P	24.	0.75P
10.	AL	25.	1.00P
11.	0.25P	26.	1.20P
12.	0.50P	27.	1.33P
13.	0.75P	28.	1.20P
14.	1.00P	29.	1.00P
15.	AL	30.	LOCK–OFF AT 0.9P TO 1.0P.

LOADING NOS. 2, 5, 9, 14, AND 20 SHALL BE MAINTAINED CONSTANT FOR 10 MINUTES. IF THE TOTAL MOVEMENT OBSERVED IN 10 MINUTES EXCEEDS 0.04 INCH, THE TEST LOAD SHALL BE HELD FOR AN ADDITIONAL 50 MINUTES. LOADING NO. 27 SHALL BE MAINTAINED CONSTANT FOR 60 MINUTES (HOLDING PERIOD). ALL OTHER LOADS SHALL BE HELD UNTIL MOVEMENT HAS STABILIZED (APPROXIMATELY 1 MINUTE). DURING THE HOLDING PERIOD, THE MOVEMENTS SHALL BE RECORDED AT EACH OF THE FOLLOWING ELAPSED TIMES: 0, 1, 2, 3, 4, 5, 6, 10, 15, 20, 25, 30, 45, AND 60 MINUTES. CARE MUST BE TAKEN TO ASSURE THAT THE APPLIED LOAD IS MAINTAINED CONSTANT DURING THE HOLDING PERIOD. A LOAD CELL SHALL BE USED TO MONITOR THE APPLIED LOAD DURING THE HOLDING PERIOD. A CREEP CURVE SHOWING THE CREEP MOVEMENT BETWEEN 1 MINUTE AND 60 MINUTES SHALL BE PLOTTED AS A FUNCTION OF THE LOGARITHM OF TIME.

A PERFORMANCE TESTED TIEBACK IS ACCEPTABLE IF:

A. THE MEASURED ELASTIC MOVEMENTS EXCEED 80 PERCENT OF THE THEORETICAL ELONGATION OF THE UNBONDED LENGTH PLUS THE JACKING LENGTH AT THE MAXIMUM TEST LOAD; AND

B. THE TOTAL MOVEMENT MEASURED AT THE ANCHOR HEAD IS LESS THAN THE THEORETICAL ELASTIC ELONGATION OF THE TENDON LENGTH MEASURED FROM THE HEAD OF THE JACK TO THE CENTER OF THE INSTALLED BOND LENGTH; AND

C. THE CREEP MOVEMENT BETWEEN 1 AND 10 MINUTES IS LESS THAN 0.04 INCH.

PERFORMANCE TESTED TIEBACKS WHICH FAIL TO MEET ACCEPTANCE CRITERIA (C) ABOVE WILL BE ACCEPTABLE IF THE MAXIMUM LOAD IS HELD FOR 60 MINUTES AND THE CREEP CURVE PLOTTED FROM THE MOVEMENT DATA INDICATES A CREEP RATE OF LESS THAN 0.08 INCH PER OF CYCLE OF TIME.

9.4 PROOF TEST

ALL TIEBACKS WHICH ARE NOT SUBJECT TO CREEP TESTS OR PERFORMANCE TESTS SHALL BE PROOF TESTED. PROOF TESTS SHALL BE CONDUCTED BY INCREMENTALLY LOADING AND RECORDING THE MOVEMENTS AS PER THE FOLLOWING LOADING SEQUENCE:

1. AL
2. 0.25P
3. 0.50P
4. 0.75P
5. 1.00P
6. 1.20P
7. 1.33P
8. 1.00P
9. LOCK–OFF

LOADING NO. 7 SHALL BE MAINTAINED CONSTANT FOR 10 MINUTES (HOLDING PERIOD). ALL OTHER LOADS SHALL BE HELD UNTIL MOVEMENT HAS STABILIZED, BUT NOT LESS THAN 1 MINUTE. DURING THE HOLDING PERIOD, THE MOVEMENT SHALL BE RECORDED AT EACH OF THE FOLLOWING ELAPSED TIMES: 0, 1, 2, 3, 4, 5, 6, AND 10 MINUTES. THE TOTAL MOVEMENT SHALL BE PLOTTED AS A FUNCTION OF LOAD FOR EACH PROOF TESTED TIEBACK. A PROOF TESTED ANCHOR IS ACCEPTABLE IF:

A. THE TOTAL MOVEMENT MEASURED AT 1/2 THE DESIGN LOAD AND AT THE TEST LOAD EXCEEDS 80 PERCENT OF THE THEORETICAL ELASTIC ELONGATION OF THE FREE STRESSING LENGTH FOR THIS LOAD RANGE; AND

B. THE PATTERN OF MOVEMENTS IS SIMILAR TO ADJACENT ACCEPTABLE PERFORMANCE TESTS; AND

C. PROOF TESTED ANCHORS WHICH FAIL TO MEET THE ABOVE ACCEPTANCE CRITERIA WILL BE ACCEPTABLE IF THE LOAD IS MAINTAINED UNTIL A CREEP RATE IS DETERMINED AND THE CREEP RATE IS LESS THAN 0.080 INCH PER LOG CYCLE OF TIME.

10.0 REDESIGN

IF THE CONTRACTOR DESIRES TO USE A TIEBACK THAT HAS FAILED TO SATISFY TESTING ACCEPTANCE CRITERIA, HE MUST OBTAIN APPROVAL FROM THE ENGINEER. THE TOTAL MOVEMENT MEASURED AT THE ANCHOR HEAD MUST HAVE BEEN GREATER THAN 80 PERCENT OF THE THEORETICAL ELASTIC ELONGATION OF THE FREE LENGTH. THE DIRECTOR WILL DETERMINE THE MAGNITUDE OF LOAD RESISTANCE THAT CAN BE ASSIGNED TO THE FAILED TIEBACK. AN ADDITIONAL TIEBACK SHALL THEN BE INSTALLED AT A LOCATION APPROVED BY THE ENGINEER, AND IN ACCORDANCE WITH THESE SPECIAL PROVISIONS. THIS ADDITIONAL TIEBACK SHALL BE TESTED TO DETERMINE IF THE TOTAL CAPACITY OF THE FAILED TIEBACK PLUS THE ADDITIONAL TIEBACK EXCEEDS THE 1.33P LOAD.

THE ADDITIONAL TESTS DESCRIBED IN THIS SECTION AND ALL REPLACEMENT AND/OR ADDITIONAL TIEBACKS WHICH ARE NECESSARY AS A RESULT OF THE CONTRACTOR'S PROCEDURES SHALL BE FURNISHED AT NO ADDITIONAL COST.

11.0 CUTTING OF PRESTRESSING STEEL PROTRUSIONS

AFTER A TIEBACK HAS BEEN ACCEPTED BY THE ENGINEER, THE PORTION OF THE ANCHORED PRESTRESSING STEEL PROTRUDING OVER THE ANCHORAGE MAY BE CUT, IF NOT OTHERWISE REQUIRED FOR USE IN RETESTING. CUTTING SHALL BE DONE TO THE PRESTRESSING STEEL MANUFACTURER'S RECOMMENDATIONS AND AS APPROVED BY THE ENGINEER. CARE SHALL BE TAKEN NOT TO DAMAGE THE ANCHORAGE. CUTTING SHALL BE DONE PRIOR TO COATING THE ANCHORAGE.

12.0 FINAL REPORT OF TIEBACK INSTALLATIONS

DURING EACH WEEK OF THE TIME PERIOD WHEN TIEBACK WORK IS IN PROGRESS, THE CONTRACTOR SHALL FURNISH TO THE ENGINEER THREE COPIES OF A TIEBACK REPORT. THIS REPORT SHALL BE SUBMITTED AT THE END OF EACH WEEK AND SHALL CONTAIN THE FOLLOWING INFORMATION:

A. A TABULATION OF DATA FROM ALL TIEBACK TESTING;

B. PLOTS OF ALL GRAPHICAL TEST DATA;

THE CONTRACTOR SHALL ALSO FURNISH THREE COPIES OF A FINAL REPORT, IN A BOUND 8–1/2 INCH BY 11 INCH FORMAT, WHICH IS TO INCLUDE THE ABOVE ITEMS, PLUS THE FOLLOWING:

A. TYPE OF INSTRUMENTATION USED FOR CONDUCTING TESTING;

B. TESTING PROCEDURES;

C. CONSTRUCTION PROCEDURES;

D. GROUTING RECORDS;

E. CONSTRUCTION DIFFICULTIES AND/OR SPECIAL TECHNIQUES;

F. FINAL TIEBACK LOCATIONS, BOND LENGTH, FREE LENGTH, TOTAL LENGTH, AND ANGLES; AND

G. A DISCUSSION DESCRIBING THE FAILURE TEST PROCEDURES AND RESULTS.

THE REPORTING OF THIS INFORMATION IS CONSIDERED INCIDENTAL TO THE INSTALLATION OF THE TIEBACKS.

13.0 METHOD OF MEASUREMENT AND PAYMENT

ITEM SPECIAL, "TIEBACKS," SHALL BE MEASURED PER EACH TIEBACK AUTHORIZED AND ACCEPTED. THIS ITEM WILL BE PAID FOR AT THE CONTRACT PRICE AND SHALL INCLUDE ALL LABOR, EQUIPMENT, AND MATERIALS NECESSARY TO COMPLETE THIS WORK. THE MAJOR ITEMS INCLUDED WITH THIS ITEM ARE THE DRILLING HOLES CUT IN EXISTING WALLS, TENDONS, GROUT, CORROSION PROTECTION, ANCHORAGE, FINAL REPORT OF TIEBACK INSTALLATION, TRUMPET, CENTRALIZERS, SPACERS, AND ANCHORAGE PROTECTION.

ITEM SPECIAL, "FAILURE TESTS," SHALL BE MEASURED AS THE ACTUAL NUMBER OF FAILURE TESTS AUTHORIZED AND ACCEPTED BY THE DEPARTMENT. THIS ITEM WILL BE PAID FOR AT THE CONTRACT UNIT PRICE PER EACH AND SHALL INCLUDE ALL LABOR, EQUIPMENT, AND MATERIALS AS NECESSARY TO COMPLETE THE WORK.

ITEM SPECIAL, "CREEP TESTS," SHALL BE MEASURED AS THE ACTUAL NUMBER OF CREEP TESTS AUTHORIZED AND ACCEPTED BY THE ENGINEER. THIS ITEM WILL BE PAID FOR AT THE CONTRACT UNIT PRICE PER EACH AND SHALL INCLUDE ALL LABOR, EQUIPMENT, AND MATERIALS AS NECESSARY TO COMPLETE THIS WORK.

ITEM SPECIAL, "PERFORMANCE TESTS," SHALL BE MEASURED AS THE ACTUAL NUMBER OF PERFORMANCE TESTS AUTHORIZED AND ACCEPTED BY THE ENGINEER. THIS ITEM WILL BE PAID FOR AT THE CONTRACT UNIT PRICE PER EACH AND SHALL INCLUDE ALL LABOR, EQUIPMENT, AND MATERIALS AS NECESSARY TO COMPLETE THIS WORK.

ITEM SPECIAL, "PROOF TESTS," SHALL BE MEASURED AS THE ACTUAL NUMBER OF PROOF TESTS AUTHORIZED AND ACCEPTED BY THE ENGINEER. THIS ITEM WILL BE PAID FOR AT THE CONTRACT UNIT PRICE PER EACH AND SHALL INCLUDE ALL LABOR, EQUIPMENT, AND MATERIALS AS NECESSARY TO COMPLETE THIS WORK.

SUGGESTED CONSTRUCTION PROCEDURE – PIER WALL TIEBACKS

- MARK TIEBACK LOCATIONS.
- CORE HOLES THROUGH PIER WALL.
- INSTALL DISTRIBTUTION BEAM, INCLUDING REINFORCED CONCRETE ENCASEMENT. PROVIDE BLOCKOUT AT EACH TENDON LOCATION PER PLAN DETAILS.
- INSTALL TENDONS IN ACCORDANCE WITH PLANS AND SPECIFICATIONS INCLUDING TESTING.
- AFTER TENDONS ARE INSTALLED AND ACCEPTED, COMPLETE CONCRETE ENCASEMENT.
- REMOVE EXISTING STRUCTURE TO LEVEL SHOWN IN THE PLANS.
- CONSTRUCT NEW TOP OF WALL WITH COPING TO MATCH TOP OF EXISTING ADJACENT RETAINING WALL.

TIEBACKS MUST BE IN PLACE AND COMPLETE BEFORE THE EXISTING SUPERSTRUCTURE IS REMOVED.

SFN: 1833936
Stokes 0031 (4:021)

6B/23

STILSON & ASSOCIATES, INC.
CONSULTING ENGINEERING AND ARCHITECTURE
COLUMBUS AND CLEVELAND

GENERAL NOTES – 6
CITY OF CLEVELAND BRIDGE No. 4:021C
STOKES BLVD OVER NORFOLK & WESTERN R.R., CONRAIL & G.C.R.T.A.

CUYAHOGA COUNTY STA. 15+20.88 STA. 17+08.70

DESIGNED	DRAWN	TRACED	CHECKED	REVIEWED	DATE	REVIEWED
W.M.	P.A.T.			C.W.M.	11/9/98	

FHWA REGION	STATE	PROJECT	TYPE FUNDS
5	OHIO		

37
58

CUYAHOGA COUNTY
CUY–FAIRHILL ROAD

ESTIMATED QUANTITIES

Calc. By : VM Date: 12/94
Chkd. By : DJC Date: 12/94

Item	Item Ext.	Total	Unit	Description	Abutments		Pier		Superstructure	General	As Per Plan Sheet Reference
					Rear	Forward	Pier #1	Pier #2			
202	11201	Lump	Lump	Portions Of Structure Removed, As Per Plan							32, 38, 39, 40
503	11100	Lump	Lump	Cofferdams, Cribs and Sheeting		Lump					38, 43A
503	21101	510	Cu. Yd.	Unclassified Excavation, As Per plan	175	203	38	94			40, 42, 43A
503	31100	87	Cu. Yd.	Rock Excavation		13	59	15			
512	44400	8	Sq. Yd.	Type B Waterproofing	5	3					
Special	51267504	825	Sq. Yd.	Sealing of Concrete Surfaces (Non – Epoxy) (See Proposal Note)					825		
Special	51267502	228	Sq. Yd.	Sealing of Concrete Surfaces (Epoxy) (See Proposal Note)	137	91					
516	11210	132	Lin. Ft.	Structural Expansion Joint, Including Elastomeric Strip Seal	66	66					
516	13200	101	Sq. Ft.	1/2" Preformed Expansion Joint Filler	82	19					
516	44000	8	Each	Elastomeric Bearing With Internal Laminates & Load Plate, (Neoprene), Pad Size = 11" x 9" x 1 1/2", Load Plate Size = 12" x 10" x 1 1/2"	8						
516	44100	8	Each	Elastomeric Bearing With Internal Laminates & Load Plate, (Neoprene), Pad Size = 11" x 9" x 2 15/16" Load Plate Size = 12" x 10" x 1 1/2"		8					
516	44100	8	Each	Elastomeric Bearing With Internal Laminates & Load Plate, (Neoprene), Pad Size 19" x 10" x 2 3/4", Load Plate Size = 27" x 11" x 1 1/2"			8				
516	44100	8	Each	Elastomeric Bearing With Internal Laminates & Load Plate, (Neoprene), Pad Size = 18" x 11" x 2", Load Plate Size = 19" x 12" x 1 1/2"				8			
517	76300	439*	Lin. Ft.	Railing, Misc.: Ornamental Metal Railing					439		50
Special	60739920	361	Lin. Ft.	VANDAL PROTECTION FENCE, 10' CURVED, COATED FABRIC					361		50
Special	60739900	78	Lin. Ft.	VANDAL PROTECTION FENCE, 6' STRAIGHT, COATED FABRIC					78		
518	21200	110	Cu. Yd.	Porous Backfill With Filter Fabric	45	65					
518	40001	200	Lin. Ft.	6" Perforated Corrugated Plastic Pipe, As Per Plan	101	99					40, 42
518	40011	42	Lin. Ft.	6" Non–Perforated Corrugated Plastic Pipe, Including Specials, As Per Plan	32	10					40, 42
843	50000	500	Sq. Ft.	Patching Concrete With Trowelable Mortar	500						
524	94702	104	Lin. Ft.	Drilled Shafts, 36" Diameter, Above Bedrock		104					
524	94704	30	Lin. Ft.	Drilled Shafts, 36" Diameter, Into Bedrock		30					
Special	53000200	Lump	Lump	Structure, Misc: Temporary Falsework And Protective Structures							
Special	53000400	1	Each	Structure, Misc: Failure Tests							
Special	53000400	2	Each	Structure, Misc: Creep Tests							
Special	53000400	4	Each	Structure, Misc: Performance Tests							
Special	53000400	22	Each	Structure, Misc: Proof Tests							
Special	53000400	28	Each	Structure, Misc: Tiebacks						28	
610	13000	1828	Sq. Ft.	CELLULAR RETAINING WALL (CONCRETE)							
816	00600	Lump	Lump	Field Painting New Steel Intermediate and Finish Coat, System IZEU					Lump		46
842	34000	435	Cu. Yd.	Class S Concrete, Superstructure					435		
842	42000	335	Cu. Yd.	Class C Concrete, Pier Above Footings			165	170			
842	44100	204	Cu. Yd.	Class C Concrete, Abutment Not Including Footing	135	69					
842	46500	149	Cu. Yd.	Class C Concrete, Footing	3	58	44	44			
846	73000	82	Sq. Yd.	Treating Concrete Bridge Decks with HMWM Resin					82		
863	10060	Lump	Lump	Structural Steel Members, Level Three (3) Fabrication, A709 Grade 50W,					Lump		45
863	20000	3240	Each	Welded Stud Shear Connector					3240		

* – 100% Cost of this Item to be paid for by the City of Cleveland.

Stokes 0031 (4:021) SFN: 1833936

7 / 23

G & T ASSOCIATES INC. Consulting Engineers
11925 Pearl Rd. Strongsville, Ohio 44136 (216) 572–0555

ESTIMATED QUANTITIES
CITY OF CLEVELAND BRIDGE NO. 4:021C
FAIRHILL ROAD OVER NORFOLK & WESTERN R.R., CONRAIL & G.C.R.T.A.
CUYAHOGA COUNTY STA. 15+20.88 STA. 17+08.70

DESIGNED	DRAWN	TRACED	CHECKED	REVIEWED	DATE	REVISED
DN	VM	——	DJC	CKP	12/94	

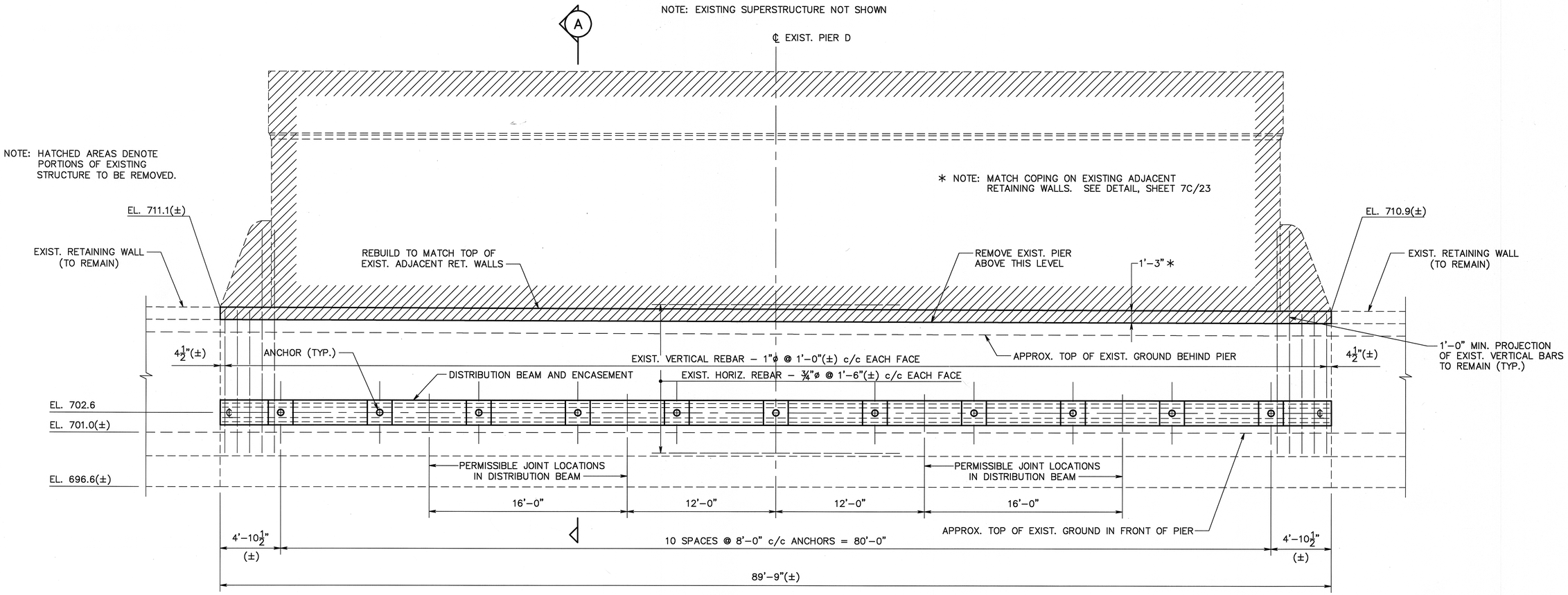

ELEVATION – EXISTING PIER D

VIEW LOOKING NORTH

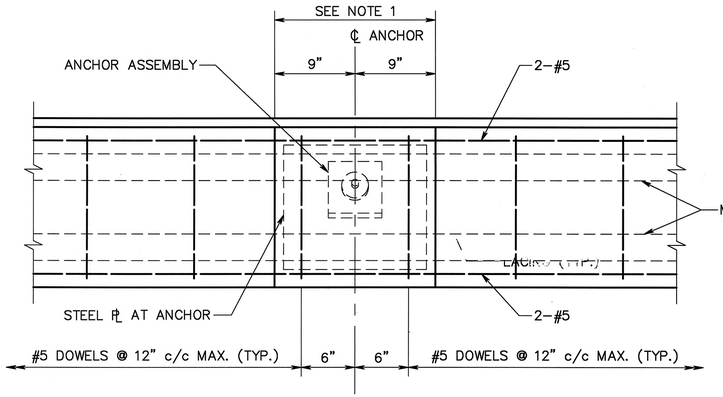

DISTRIBUTION BEAM – TYPICAL ELEVATION

NOTE:

ANCHOR DESIGN LOAD FOR PIER D = 63.0 KIPS

GROUND ANCHORS MUST BE INSTALLED AND ACCEPTED BEFORE REMOVAL OF THE EXISTING SUPERSTRUCTURE.

NOTES:

1. DISTRIBUTION BEAM CONCRETE PROTECTION SHALL BE PLACED AND CURED PRIOR TO POST–TENSIONING ANCHORS. PROVIDE FULL HEIGHT BLOCK OUT IN THE AREA SHOWN TO LEAVE ANCHOR ASSEMBLY EXPOSED. FILL BLOCK OUT WITH CONCRETE AND FINISH AFTER ALL ANCHORS HAVE BEEN POST–TENSIONED, TESTED AND ACCEPTED.
2. THE DISTRIBUTION BEAM (CHANNELS, PLATES, SEPERATORS, ETC.) SHALL BE DESIGNED ~~BY THE CONTRACTOR~~ PER THE GENERAL NOTES. CONCRETE ENCASEMENT SHALL BE SIZED TO PROVIDE A MINIMUM OF 3 INCHES CLEAR COVER.

7A/23

STILSON & ASSOCIATES, INC.
CONSULTING ENGINEERING AND ARCHITECTURE
COLUMBUS AND CLEVELAND

ANCHOR INSTALLATION DETAILS
CITY OF CLEVELAND BRIDGE No. 4:021C
STOKES BLVD OVER NORFOLK & WESTERN R.R., CONRAIL & G.C.R.T.A.

CUYAHOGA COUNTY
STA. 15+20.88
STA. 17+08.70

DESIGNED	DRAWN	TRACED	CHECKED	REVIEWED DATE	REVIEWED
W.M.	P.A.T.			G.W.M. 11/9/98	

Stokes 0031 (4:021) SFN: 1833936

CALC. BY		CUYAHOGA COUNTY	OHIO	37B
DATE		CUY–STOKES BLVD	FHWA REGION 5	58
CHKD. BY				
DATE				

NOTE: EXISTING SUPERSTRUCTURE NOT SHOWN

B

℄ EXIST. PIER A

7 SPA @ 11'–0"(±) c/c EXIST. COLUMNS = 77'–0"(±)

5'–6"(±) 5'–6"(±)

NOTE: HATCHED AREAS DENOTE PORTIONS OF EXISTING STRUCTURE TO BE REMOVED.

* NOTE: MATCH COPING ON EXISTING ADJACENT RETAINING WALLS. SEE DETAIL, SHEET 7C/23.

EXIST. STEEL BEAMS ENCASED IN CONC.

EXIST. STEEL COLUMN ENCASED AS INDICATED

REMOVE EXIST. PIER ABOVE THIS LEVEL

EL. 708.9(±)

EXIST. VERTICAL REBAR ¾"ø @ 1'–0"(±) c/c (TYP. AT ENDS OF PIER)

4½"(±) (TYP.)

6'–6" CONCRETE ENCASEMENT

5'–1"(±) BRICK INFILL

CONCRETE ENCASEMENT

EXIST. VERTICAL REBAR ¾"ø @ 1'–0"(±) c/c (TYP. BETWEEN COLUMNS)

REBUILD TO MATCH TOP OF EXIST. ADJACENT RET. WALLS

EL. 714.0(±)

EXIST. RETAINING WALL (TO REMAIN)

1'–3" *

1'–0" MIN. PROJECTION OF EXIST. VERTICAL BARS TO REMAIN (TYP.)

APPROX. TOP OF EXIST. GROUND BEHIND PIER

APPROX. TOP OF EXIST. GROUND IN FRONT OF PIER

ANCHOR (TYP.)

FILL REFUGE NICHE WITH CONC. TO TOP OF DISTRIB. BEAM ENCASEMENT (TYP.)

EXIST HORIZ. REBAR ¾"ø @ 1'–6"(±) c/c EACH FACE

DISTRIBUTION BEAM AND ENCASEMENT

EL. 704.9

EL. 702.0(±)

EL. 697.4(±)

5'–6" 5'–6" 5'–6" 5'–6" 5'–6" 5'–6" 5'–6" 5'–6" 5'–6" 5'–6" 5'–6" 5'–6"

PERMISSIBLE JOINT LOCATIONS IN DISTRIBUTION BEAM

SPACING c/c ANCHORS

4'–4½" (±) 4'–0" 7'–0" 4'–0" 7'–0" 4'–0" 7'–0" 4'–0" 7'–0" 4'–0" 7'–0" 4'–0" 7'–0" 4'–0" 7'–0" 4'–0" 4'–4½" (±)

89'–9"(±)

ELEVATION – EXISTING PIER A

VIEW LOOKING SOUTH

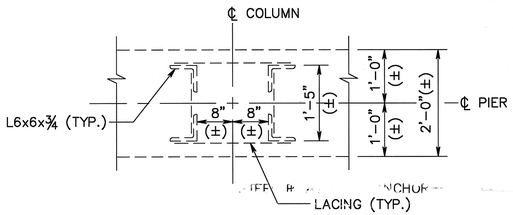

TYPICAL SECTION THROUGH EXISTING ENCASED COLUMNS

NOTE:

ANCHOR DESIGN LOAD FOR PIER A = 53.0 KIPS

GROUND ANCHORS MUST BE INSTALLED AND ACCEPTED BEFORE REMOVAL OF THE EXISTING SUPERSTRUCTURE.

7B/23

STILSON & ASSOCIATES, INC.
CONSULTING ENGINEERING AND ARCHITECTURE
COLUMBUS AND CLEVELAND

ANCHOR INSTALLATION DETAILS
CITY OF CLEVELAND BRIDGE No. 4:021C
STOKES BLVD OVER NORFOLK & WESTERN R.R., CONRAIL & G.C.R.T.A.

CUYAHOGA COUNTY STA. 15+20.88 STA. 17+08.70

DESIGNED	DRAWN	TRACED	CHECKED	REVIEWED	DATE	REVIEWED
W.M.	P.A.T.			G.W.M.	11/9/98	

Stokes 0031 (4:021) SFN: 1833936

CALC. BY		CUYAHOGA COUNTY	OHIO	37C
DATE		CUY–STOKES BLVD	FHWA REGION 5	58
CHKD. BY				
DATE				

NOTE: HATCHED AREAS DENOTE PORTIONS OF EXISTING STRUCTURE TO BE REMOVED.

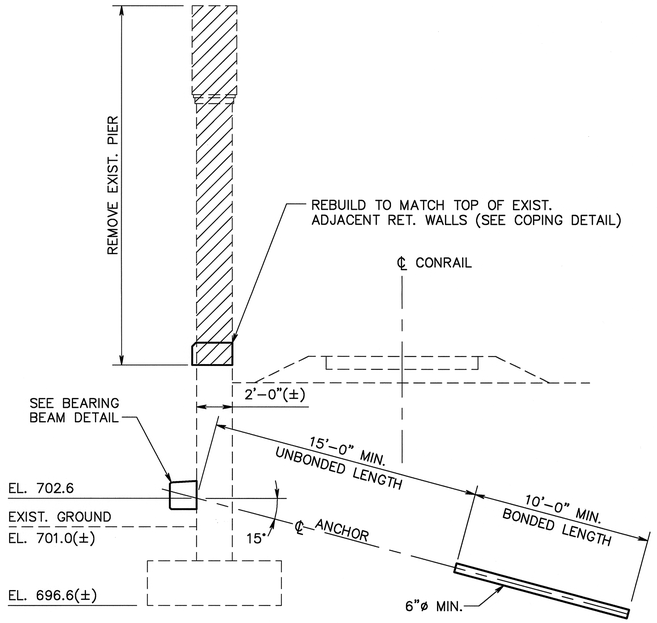

SECTION A

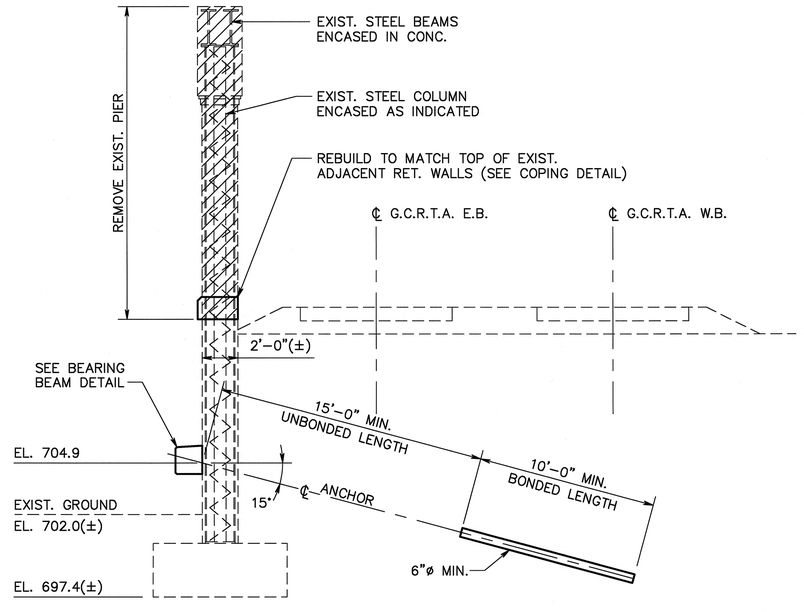

SECTION B

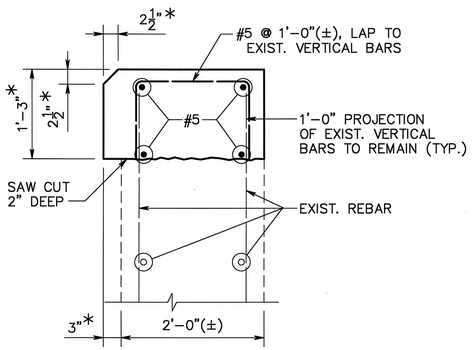

* CONTRACTOR TO FIELD VERIFY DIMENSIONS OF COPING AT TOPS OF EXIST. ADJACENT RETAINING WALLS AND PROVIDE NEW COPING TO MATCH.

COPING DETAIL

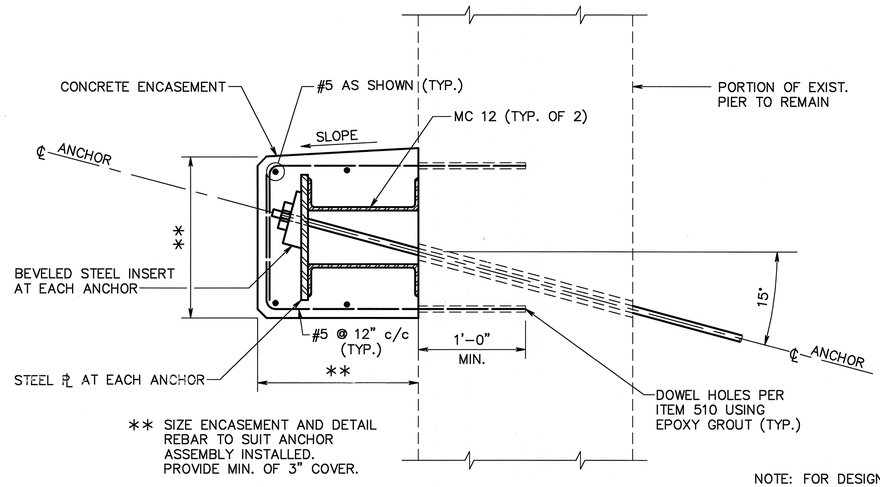

** SIZE ENCASEMENT AND DETAIL REBAR TO SUIT ANCHOR ASSEMBLY INSTALLED. PROVIDE MIN. OF 3" COVER.

DISTRIBUTION BEAM DETAIL

NOTE: FOR DESIGN REQUIREMENTS OF THE DISTRIBUTION BEAM, REFER TO THE GENERAL NOTES.

7C/23

STILSON & ASSOCIATES, INC.
CONSULTING ENGINEERING AND ARCHITECTURE
COLUMBUS AND CLEVELAND

ANCHOR INSTALLATION DETAILS
CITY OF CLEVELAND BRIDGE No. 4:021C

STOKES BLVD OVER NORFOLK & WESTERN R.R., CONRAIL & G.C.R.T.A.

CUYAHOGA COUNTY — STA. 15+20.88, STA. 17+08.70

DESIGNED	DRAWN	TRACED	CHECKED	REVIEWED	DATE	REVIEWED
W.M.	P.A.T.			G.W.M.	11/9/98	

Stokes 0031 (4:021) SFN: 1833936

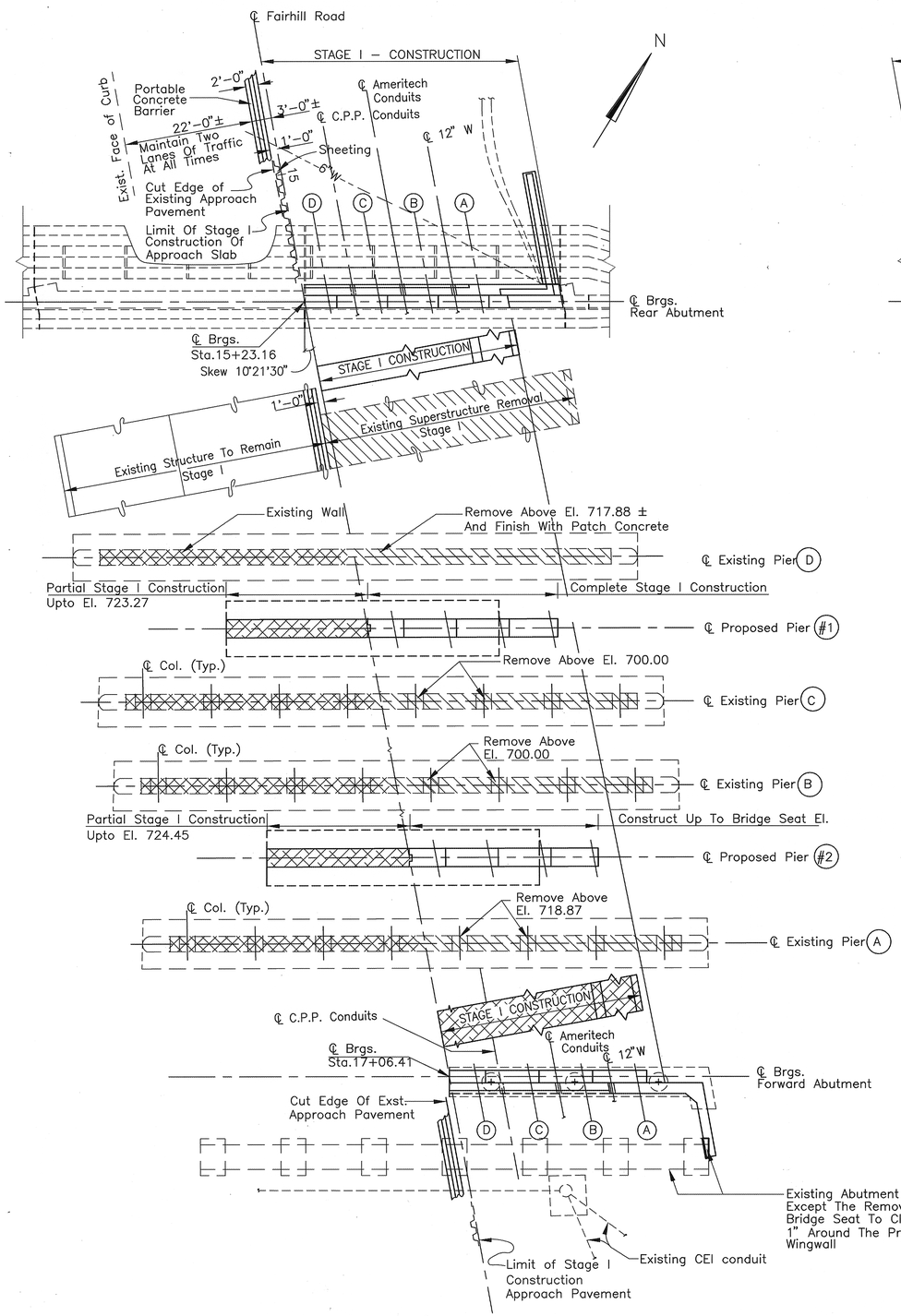

STAGE I REMOVAL AND CONSTRUCTION

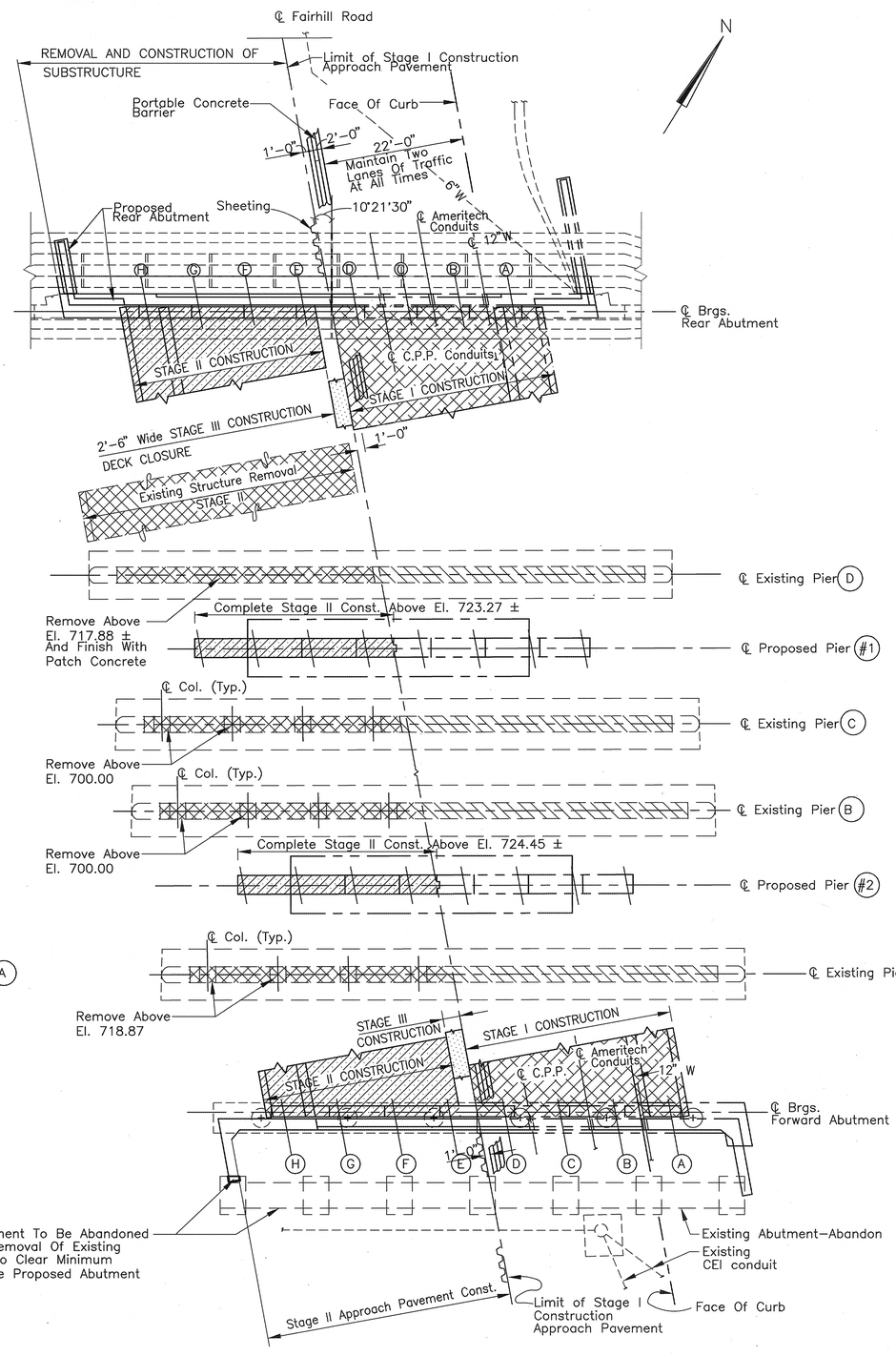

STAGE II REMOVAL AND CONSTRUCTION

FHWA REGION	STATE	PROJECT	TYPE FUNDS
5	OHIO		

38
58

CUYAHOGA COUNTY
CUY–FAIRHILL ROAD

NOTE:

1. Contractor to field verify location of existing utilities and make sure that construction sheeting does not interfere with the same.
2. Finish exposed concrete surfaces after removal of portions of structure with patch concrete. Payment for patch concrete to be included in pay Item 202; "Portion of structure removed", *As Per Plan*.
3. For additional maintenance of traffic and stage construction details see sht. 9 /23

LEGEND:

- Stage I Removal
- Stage II Removal
- Stage I Construction
- Stage II Construction
- Stage III Construction

8 / 23

G & T ASSOCIATES INC. Consulting Engineers
11925 Pearl Rd. Strongsville, Ohio 44136 (216) 572-0555

MAINTENANCE OF TRAFFIC
STAGE CONSTRUCTION DETAILS
CITY OF CLEVELAND BRIDGE NO. 4:021C
FAIRHILL ROAD OVER NORFOLK & WESTERN R.R., CONRAIL & G.C.R.T.A.
CUYAHOGA COUNTY STA. 15+20.88 STA. 17+08.70

DESIGNED	DRAWN	TRACED	CHECKED	REVIEWED	DATE	REVISED
DN	LAR	—	DJC	CKP	12/94	

Stokes 0031 (4:021) SFN: 1833936

ABTSTG-1.DWG, PLOT SCALE: 1=128

FHWA REGION	STATE	PROJECT	TYPE FUNDS
5	OHIO		

39
58

CUYAHOGA COUNTY
CUY–FAIRHILL ROAD

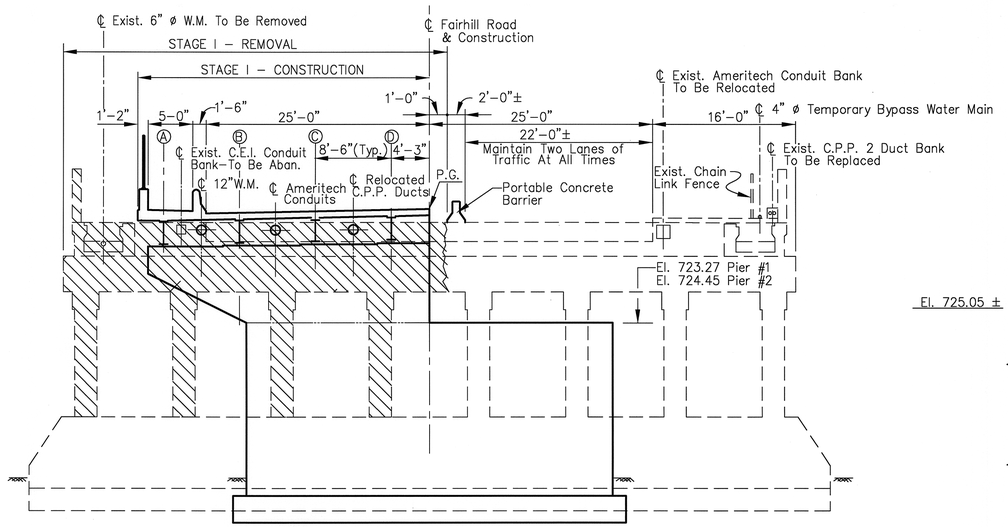

TRANSVERSE SECTION (Looking South)
STAGE I CONSTRUCTION

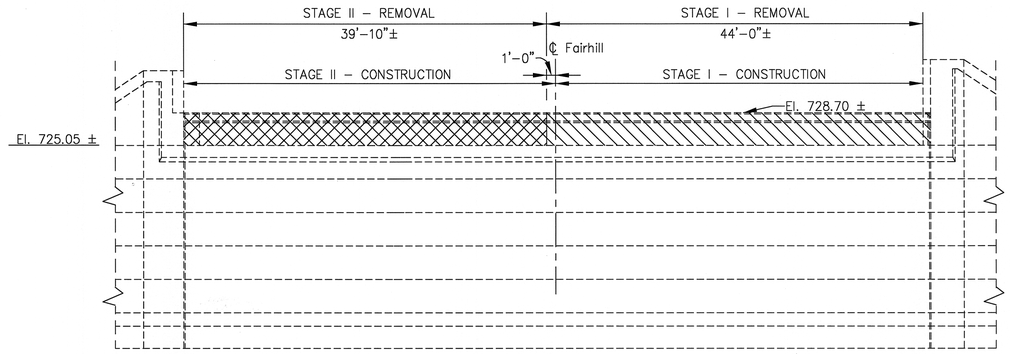

EXSITING REAR ABUTMENT (Looking North)

NOTES:

1. Contractor to field verify location of existing utilities and make sure that construction sheeting does not interfere with the same.
2. Finish exposed concrete surfaces after removal of portions of structure with patch concrete. Payment for patch concrete to be included in pay Item 202; "Portion of structure removed", As Per Plan.
3. For additional maintenance of traffic and stage construction details see sht. 9/23
4. For Staged Construction General Notes See Sheet 3/25

LEGEND:

- Stage I Removal
- Stage II Removal
- Stage I Construction
- Stage II Construction
- Stage III Construction

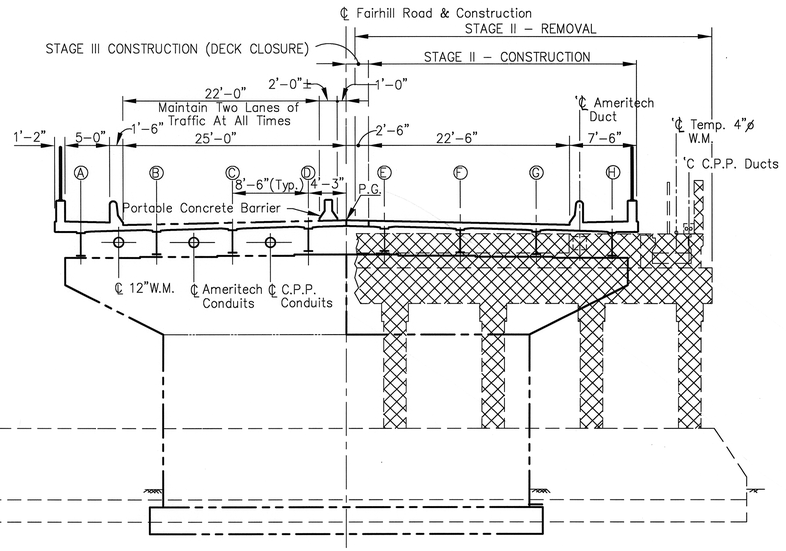

TRANSVERSE SECTION (Looking South)
STAGE II AND STAGE III CONSTRUCTION

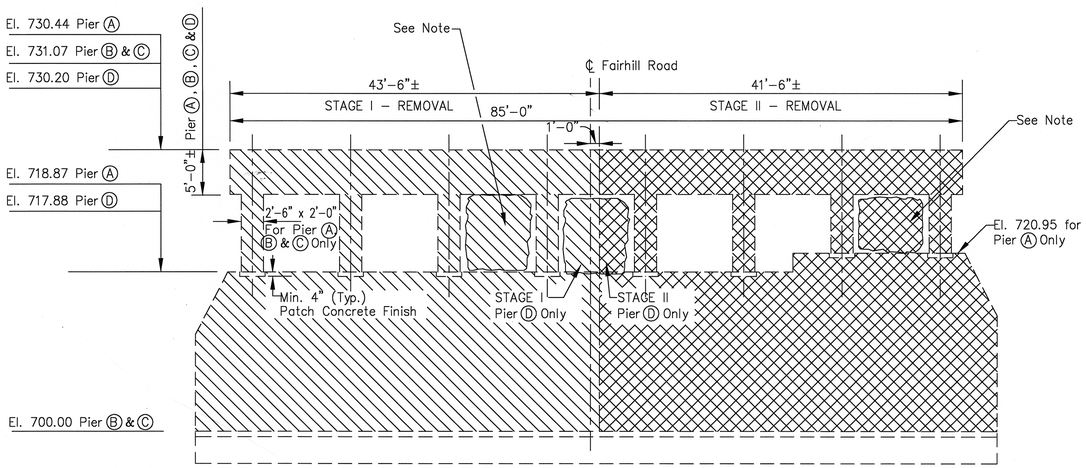

NOTE:
Piers Ⓐ, Ⓒ, and Ⓓ are solid wall above the Crash wall.
Pier Ⓑ consists of Cap and Columns above the crash wall.

EXISTING PIER – Ⓐ, Ⓑ, Ⓒ & Ⓓ (Looking South)

9/23

G & T ASSOCIATES INC. Consulting Engineers
11925 Pearl Rd. Strongsville, Ohio 44136 (216) 572–0555

MAINTENANCE OF TRAFFIC STAGE CONSTRUCTION DETAILS

CITY OF CLEVELAND BRIDGE NO. 4:021C
FAIRHILL ROAD OVER NORFOLK & WESTERN R.R., CONRAIL & G.C.R.T.A.
STA. 15+20.88
CUYAHOGA COUNTY STA. 17+08.70

DESIGNED	DRAWN	TRACED	CHECKED	REVIEWED	DATE	REVISED
DN	LAR	——	DJC	CKP	12/94	

Stokes 0031 (4:021) SFN: 1833936

P:\STAGE.DWG PLOT SCALE: 1=96

FHWA REGION	STATE	PROJECT	TYPE FUNDS	40 / 58
5	OHIO			

CUYAHOGA COUNTY
CUY–FAIRHILL ROAD

NOTES:

1. Porous backfill with filter fabric, 2 ft. thick shall extend up to the plane of the subgrade, to one foot below the embankment surface, and laterally to the ends of the wingwalls. Geotextile fabric shall conform with 712.09, Type A. The bottom of the porous backfill shall be sloped (1 inch per foot minimum) laterally to drain. Geotextile fabric included with porous backfill for payment.
2. Backwall Concrete:
   In addition to the provisions of 511.08, back wall concrete above the optional construction joint at the approach slab seat shall not be placed until after the deck concrete in the span adjacent to the abutment has been placed.
3. Installation of Seal:
   During installation of the support/armor for the superstructure side of the expansion joint seal, the seating of beams on bearings shall be carefully observed to assure that positive bearing is maintained. Proper vertical fit of the support/armor on the beams shall be achieved by positioning of the bevel fill plates rather than by clamping force.
4. Refer to water plan sheets for steel pipe sleeve.
5. Provide 3/4" chamfer to all exposed corners of proposed concrete.

REFERENCES:

1. For reinforcing schedule see sheet 22/23
2. For superstructure framing plan see sheet 15/23
3. For bearing details see sheet 15/23
4. For expansion joint details see sheet 18/23
5. For approach slab detail see ODOT Std. Dwg. AS–1–81.
6. For Utilities locations and details, see utility plans.

LEGEND:

El. = Elevation
Typ. = Typical
C.J. = Construction joint
C.P.P. = Corrugated plastic pipe, as per plan
PEJF = Performed Expansion Joint Filler
opng = opening

Indicates stage–I removal of existing abutment.

Indicates stage–II removal of existing abutment.

* Elevation set at front face of backwall

REQUIRED LAP LENGTHS

5 Bar = 2'–0"
6 Bar = 2'–4"

10 / 23

G & T ASSOCIATES INC.	Consulting Engineers
11925 Pearl Rd. Strongsville, Ohio 44136	(216) 572–0555

REAR ABUTMENT–1
(DIMENSIONS)
CITY OF CLEVELAND BRIDGE NO. 4:021C
FAIRHILL ROAD OVER NORFOLK & WESTERN R.R., CONRAIL & C.C.R.T.A.
CUYAHOGA COUNTY — STA. 15+20.88 — STA. 17+08.70

DESIGNED	DRAWN	TRACED	CHECKED	REVIEWED	DATE	REVISED
DN	VM	——	DJC	CKP	12/94	

RABUTM1.DWG PLOT SCALE: 1=64

Stokes 0031 (4:021) SFN: 1833936

FHWA REGION	STATE	PROJECT	TYPE FUNDS
5	OHIO		

41
58

CUYAHOGA COUNTY
CUY–FAIRHILL ROAD

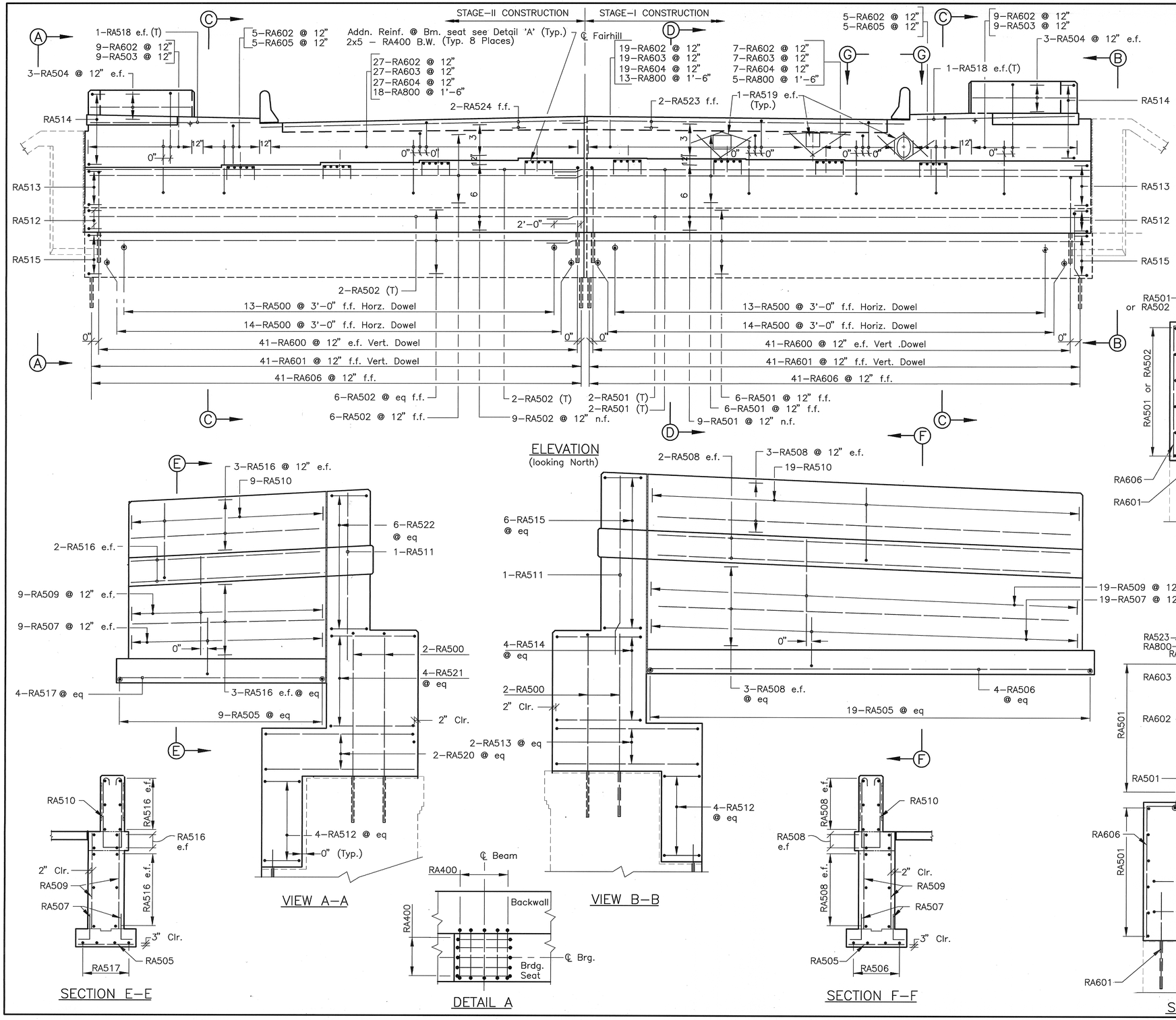

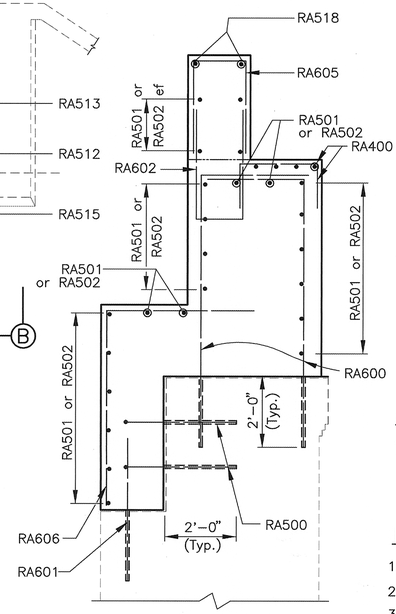

SECTION C–C

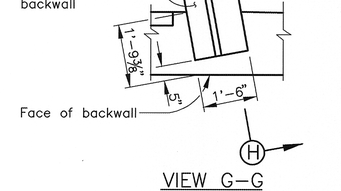

VIEW G–G

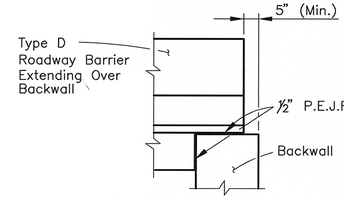

SECTION H–H

NOTES:

1. Cut or relocate reinforcing bars where they interfere with underground utilities in backwall and provide one additional #6 bar on each side 2'–3" beyond the face of opening.

REFERENCES:

1. For additional notes see sheet 10/23
2. For rear abutment dimensions see sheet 10/23
3. For reinforcing schedule see sheet 22/23

LEGEND:

eq = Equal	spa = Space
n.f. = near face	El. = Elevation
f.f. = far face	M = middle
e.f. = each face	Typ. = Typical
(T) = Top	C.J. = Contraction joint
(B) = Bottom	B.W. = Both Way

REQUIRED LAP LENGTHS

5 Bar = 2'–0"
6 Bar = 2'–4"

VIEW A–A

VIEW B–B

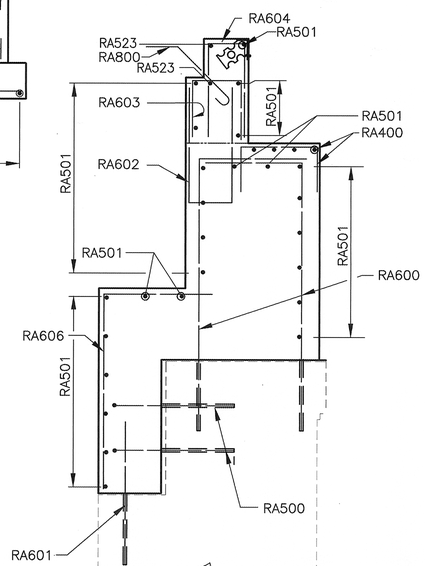

SECTION D–D

SECTION E–E

DETAIL A

SECTION F–F

11 / 23

G & T ASSOCIATES INC.	Consulting Engineers
11925 Pearl Rd. Strongsville, Ohio 44136	(216) 572–0555

REAR ABUTMENT–2
(REINFORCEMENT)
CITY OF CLEVELAND BRIDGE NO. 4:021C
FAIRHILL ROAD OVER NORFOLK & WESTERN R.R., CONRAIL & G.C.R.T.A.
CUYAHOGA COUNTY
STA. 15+20.88
STA. 17+08.70

DESIGNED	DRAWN	TRACED	CHECKED	REVIEWED	DATE	REVISED
DN	VM	——	DJC	CKP	12/94	

SFN: 1833936
Stokes 0031 (4:021)

RARUTN2.DNG, PLOT SCALE: 1=64

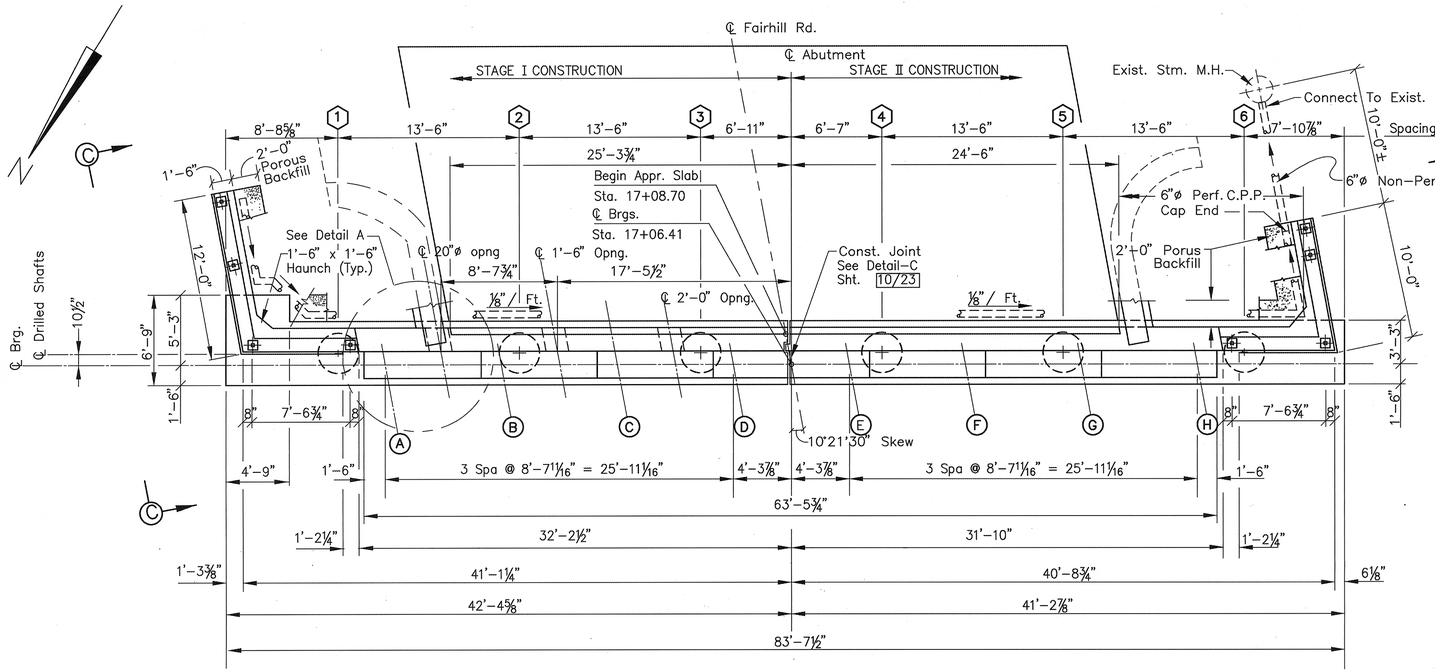

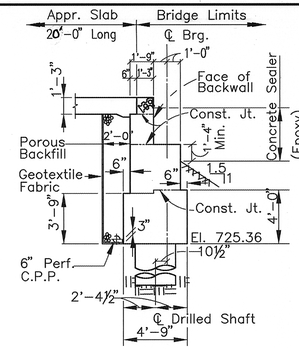

SECTION A–A

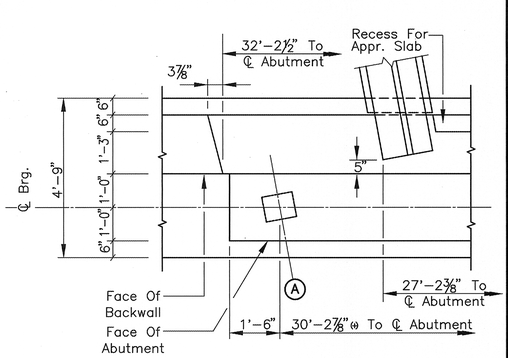

DETAIL–A

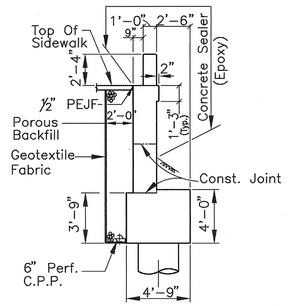

SECTION B–B

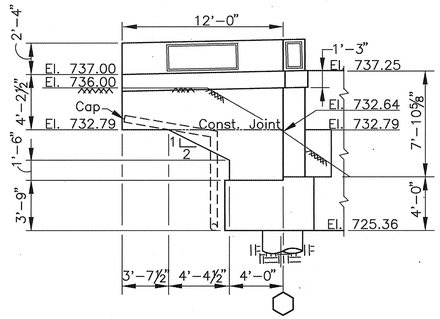

VIEW C–C

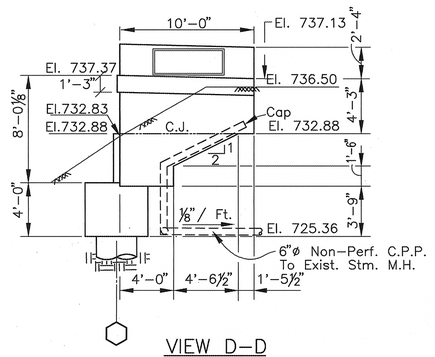

VIEW D–D

REFERENCES:

1. For abutment notes, see sheet 10/23
2. For reinforcing schedule see sheet 23/23
3. For superstructure framing plan, see sheet 15/23
4. For bearing details, see sheet 15/23
5. For expansion joint details, see sheet 18/23
6. For approach slab details, see ODOT Std. Dwg. AS-1-81.
7. For utility locations and details, see utility plans.
8. For detail showing termination of 6" ø C.P.P. see sheet 10/23

LEGEND:

n.f.= near face
f.f. = far face
e.f. = each face
(T) = Top
(B) = Bottom
opng = opening
El. = Elevation
M = middle
Typ. = Typical
C.J. = Construction joint
C.P.P = Corrugated plastic pipe
Perf. = Perforated
FGEl. = Finished Grade Elevation

* Elevation set at face of backwall

FHWA REGION	STATE	PROJECT	TYPE FUNDS
5	OHIO		

42 / 58

CUYAHOGA COUNTY
CUY–FAIRHILL ROAD

12 / 23

G & T ASSOCIATES INC. Consulting Engineers
11925 Pearl Rd. Strongsville, Ohio 44136 (216) 572-0555

FORWARD ABUTMENT–1 (DIMENSIONS)

CITY OF CLEVELAND BRIDGE NO. 4:021C
FAIRHILL ROAD OVER NORFOLK & WESTERN R.R., CONRAIL & G.C.R.T.A.
STA. 15+20.88
CUYAHOGA COUNTY STA. 17+08.70

DESIGNED	DRAWN	TRACED	CHECKED	REVIEWED	DATE	REVISED
DN	VM	——	DJC	CKP	12/94	

Stokes 0031 (4:021) SFN: 1833936

FAIRJTH1.DWG PLOT SCALE: 1=64

FHWA REGION	STATE	PROJECT	TYPE FUNDS
5	OHIO		

43A
58

CUYAHOGA COUNTY
CUY–FAIRHILL ROAD

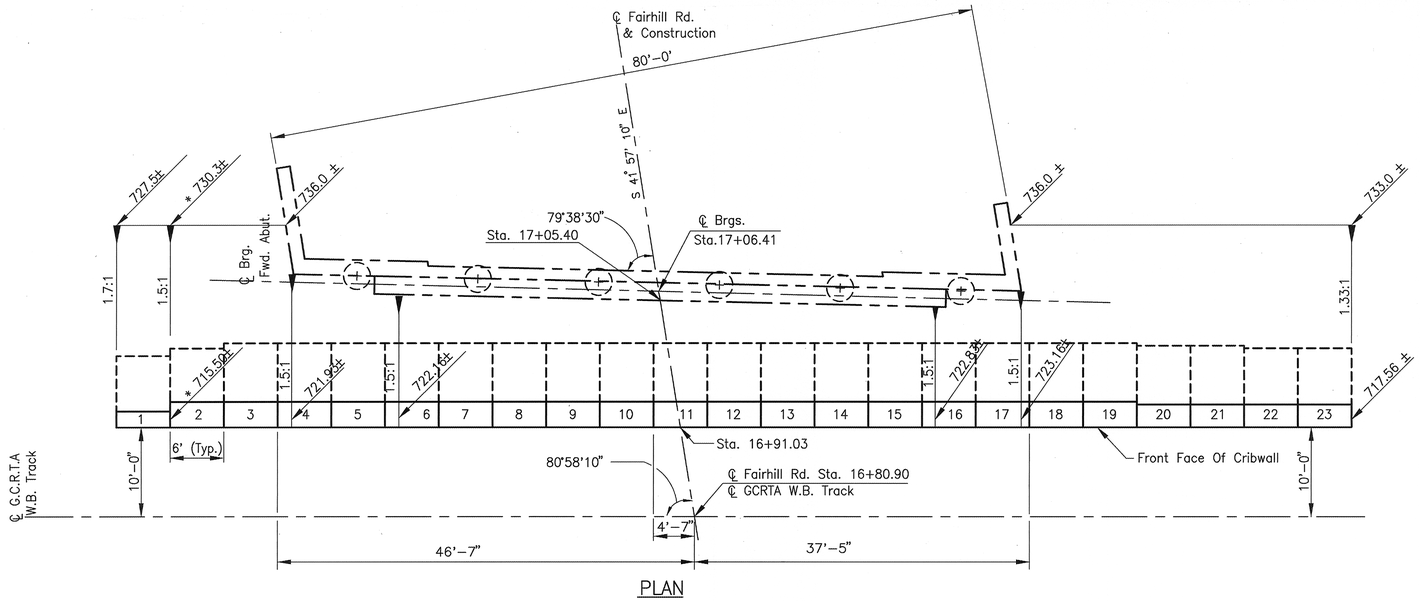

PLAN

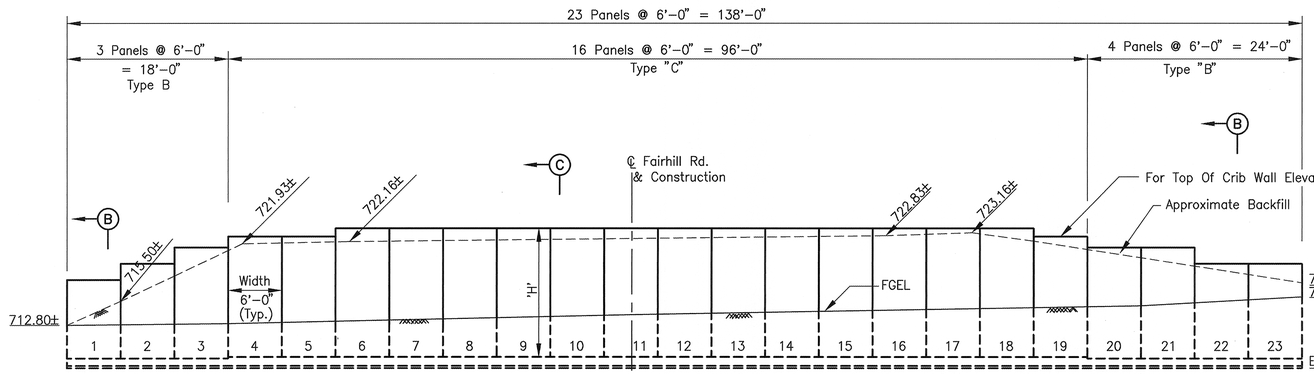

ELEVATION

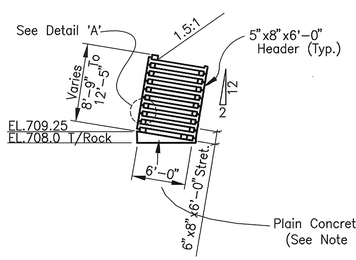

SECTION B–B
(Type B)
• Stretcher– Size 6"x6"x6'–0"
Unless Noted Otherwise

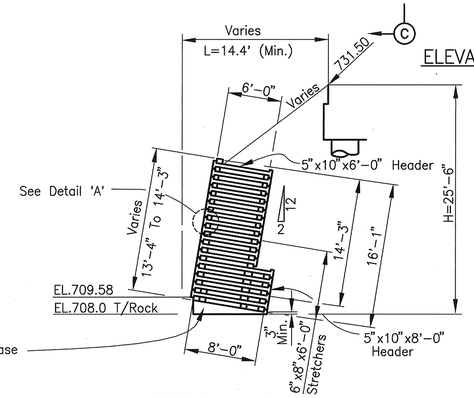

SECTION C–C
(Type C)
• Stretcher– Size 6"x6"x6'–0"
Unless Noted Otherwise

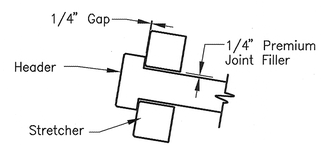

DETAIL A
(No Scale)

NOTE:
Applicable At All Intersections
of Stretchers And Headers.

Top Elev.	Panel No.	Type	'H' Height	Area
717.88	1	B	8'–9"	53
719.69	2	B	10'–7"	63
721.51	3	B	12'–5"	75
722.73	4	C	13'–4"	81
722.73	5	C	13'–4"	81
723.65	6	C	14'–3"	86
723.65	7	C	14'–3"	86
723.65	8	C	14'–3"	86
723.65	9	C	14'–3"	86
723.65	10	C	14'–3"	86
723.65	11	C	14'–3"	86
723.65	12	C	14'–3"	86
723.65	13	C	14'–3"	86
723.65	14	C	14'–3"	86
723.65	15	C	14'–3"	86
723.65	16	C	14'–3"	86
723.65	17	C	14'–3"	86
723.65	18	C	14'–3"	86
722.73	19	C	13'–4"	81
721.51	20	B	12'–5"	75
721.51	21	B	12'–5"	75
719.69	22	B	10'–7"	63
719.69	23	B	10'–7"	63
			TOTAL	1828

LEGEND:

H indicates height along the front face of cribwall

* 727.0 indicates estimated elevation of earthwork

FGEL indicates Finished Grade Elevation

NOTES:

1. The cribwall sections are based on a minimum compacted density of 120 pounds per cubic foot backfill within the crib units.
2. The cribwall shown shall be of open–face type and shall be from an approved manufacturer.
3. T/Rock El.=708.0'±
4. The plain concrete base under the crib wall shall be Class C Concrete with payment of the concrete base included in Item 610.

PAYMENT:

Payment for the cribwall shall be made at the unit price bid for Item 610–Cellular Retaining Wall (concrete).

Qty. = 1828 Sq. Ft.

This quantity is carried to the general summary.

13A / 23

G & T ASSOCIATES INC. Consulting Engineers
11925 Pearl Rd. Strongsville, Ohio 44136 (216) 572–0555

CRIBWALL
CITY OF CLEVELAND BRIDGE NO. 4:021C
FAIRHILL ROAD OVER NORFOLK & WESTERN R.R., CONRAIL & G.C.R.T.A.
CUYAHOGA COUNTY STA. 15+20.88 STA. 17+08.70

DESIGNED	DRAWN	TRACED	CHECKED	REVIEWED	DATE	REVISED
DN	VM	——	DJC	CKP	07/94	

SFN: 1833936 (4:021) Stokes 0031

CRIBT.DWG PLOT SCALE: 1=96

FHWA REGION	STATE	PROJECT	TYPE FUNDS
5	OHIO		

44
58

CUYAHOGA COUNTY
CUY–FAIRHILL ROAD

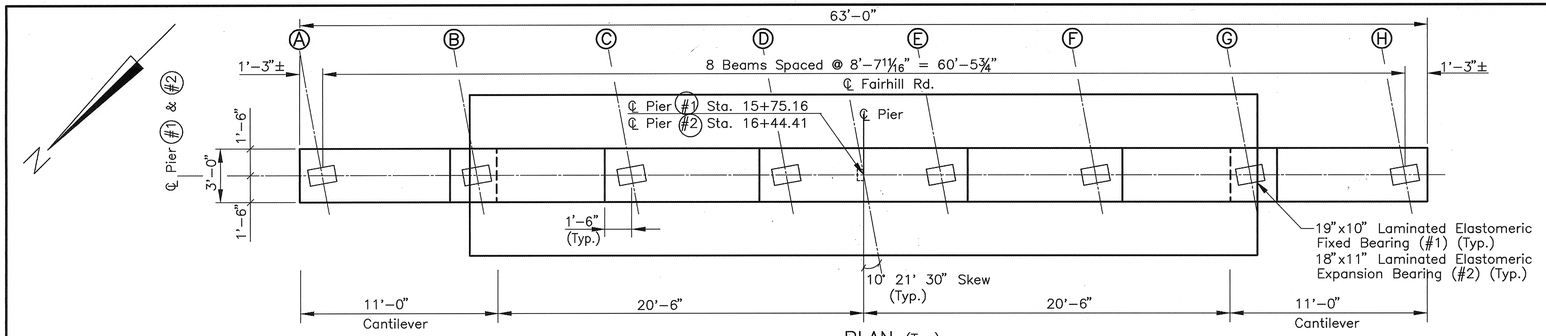

PLAN (Top)

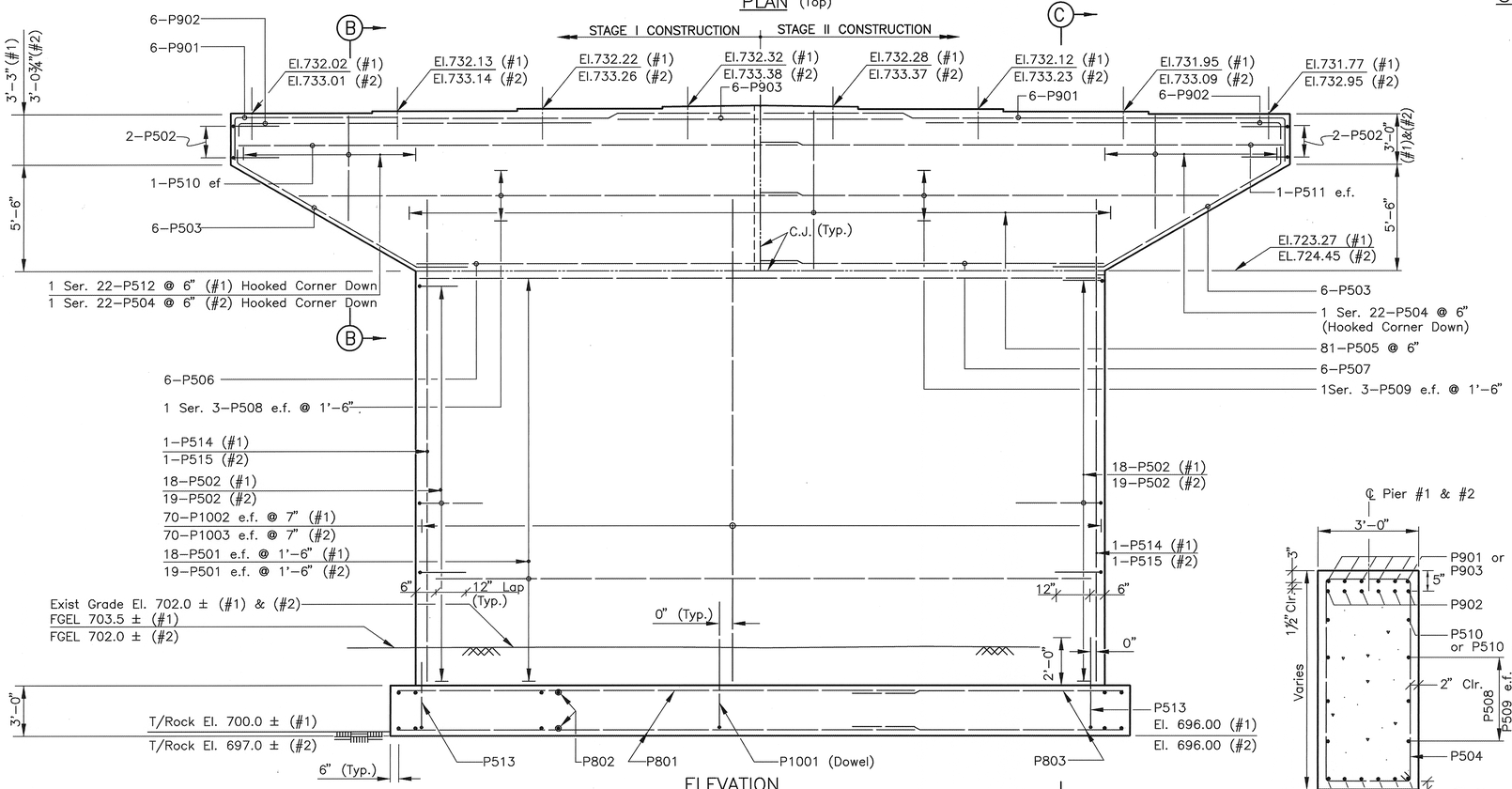

ELEVATION

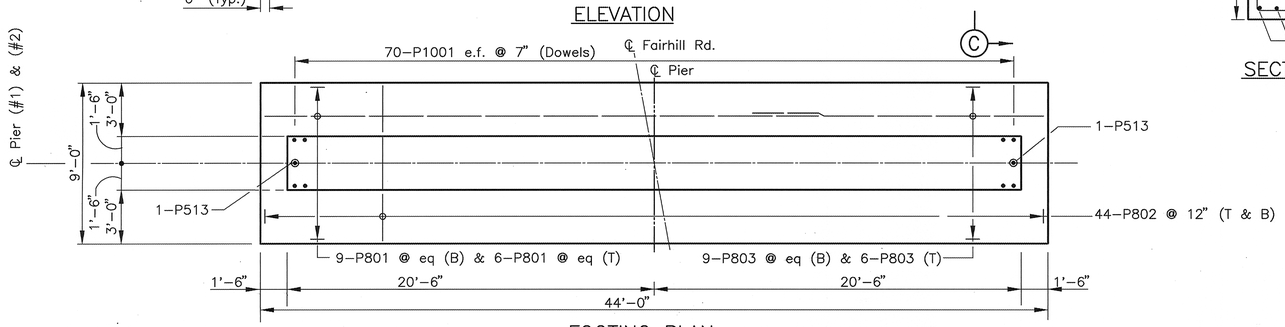

FOOTING PLAN

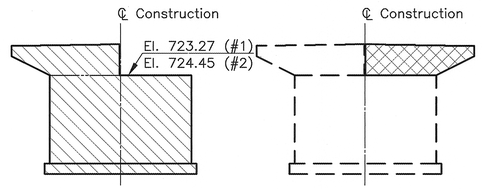

STAGE CONSTRUCTION DETAIL

SECTION B–B

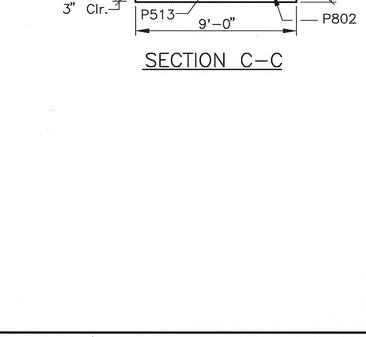

SECTION C–C

NOTES:

1. Bridge Seat Reinforcement
   Reinforcing steel in the vicinity of the Pier #1 bridge seat shall be accurately placed to avoid interference with the drilling of bearing anchor holes or the pre–setting of bearing anchors.
2. Bearing Anchors:
   At the option of the contractor, Pier #1 bearing anchors (or framed holes), located and supported by templates, may be cast in place.
3. Stirrup shall be moved to avoid interference with the dowel bar. However the spacing shall not be more than 8".
4. FOOTINGS shall extend a minimum of 3" into bedrock. If necessary, the footings should be lowered. However, if the low point of the surface of the bedrock occurs 2 feet or more above plan elevation, the footings may be raised, after approval by the Director, but to an elevation not higher than Elev. 700.0 and 697.0 for Pier 1 and 2 respectively. Stepping of individual footings will not be permitted unless shown on the plans.

REFERENCES:

1. For reinforcing schedule see sheet 21/23

LEGEND:

n.f. = near face	El. = Elevation
f.f. = far face	B.W. = both way
e.f. = each face	Typ. = Typical
(T) = Top	C.J. = Construction joint
(B) = Bottom	(#2) = Pier no.2
(#1) = Pier no.1	FGEL = Finish Grade Elevation

REQUIRED LAP LENGTHS

5 Bar = 2'–0"
8 Bar = 4'–0"
9 Bar = 9'–1"
10 Bar = 6'–4"

14 / 23

G & T ASSOCIATES INC. Consulting Engineers
11925 Pearl Rd. Strongsville, Ohio 44136 (216)–572–0555

PIER NO.1 & NO.2
CITY OF CLEVELAND BRIDGE NO. 4:021C
FAIRHILL ROAD OVER NORFOLK & WESTERN R.R., CONRAIL & G.C.R.T.A.
CUYAHOGA COUNTY STA. 15+20.88 STA. 17+08.70

DESIGNED	DRAWN	TRACED	CHECKED	REVIEWED	DATE	REVISED
DN	VM	—	DJC	CKP	12/94	

Stokes 0031 (4:021) SFN: 1833936

FHWA REGION	STATE	PROJECT	TYPE FUNDS
5	OHIO		

45
58

CUYAHOGA COUNTY
CUY–FAIRHILL ROAD

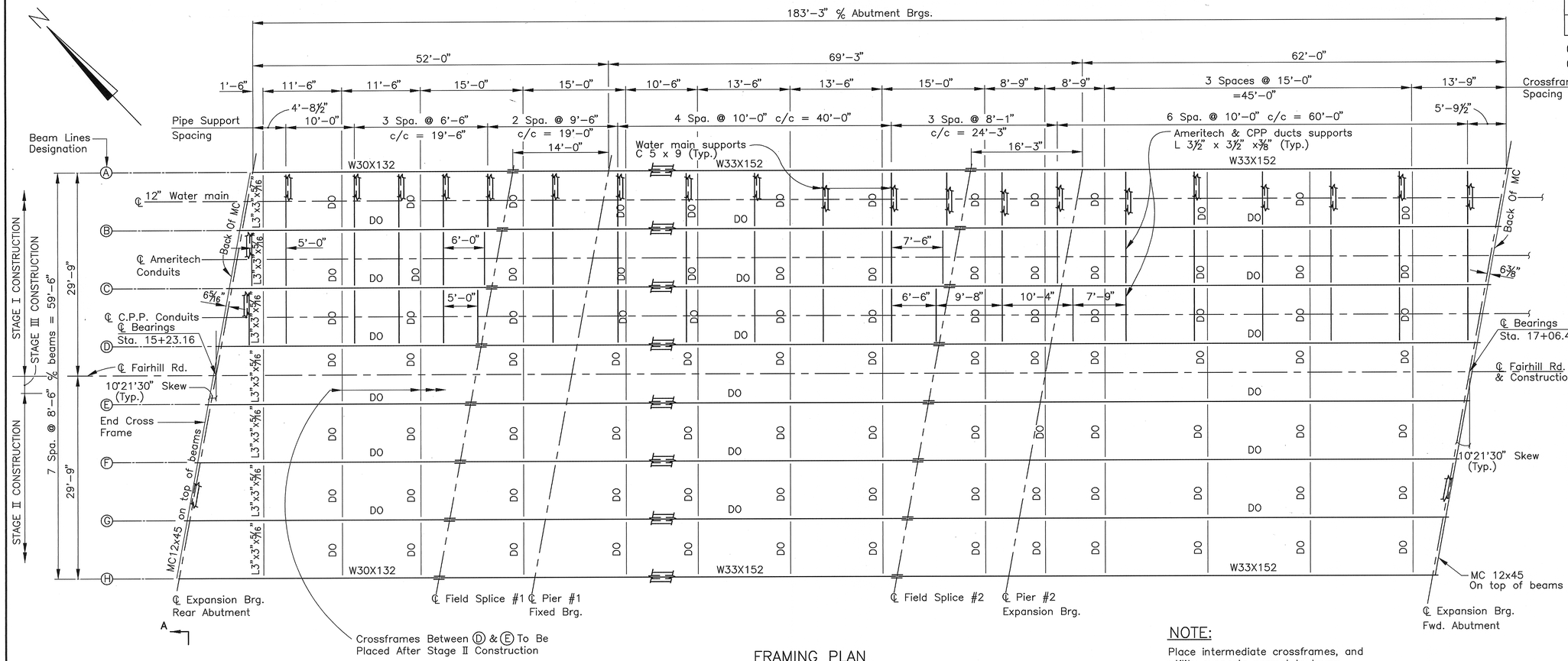

NOTES:

1. For intermediate crossframe details and end crossframe details, see sheet 17/23
2. For beam splice details, see sheet 17/23
3. For beam elevation, see sheet 16/23
4. For deflection and camber diagram, see sheet 16/23

LAMINATED ELASTOMERIC BEARING LOAD PLATE:

Welding shall be controlled so that the plate temperature at the elastomer bonded surface does not exceed 300°F as determined by use of pyrometric stick or other temperaure monitoring devices.

ELASTOMERIC BEARINGS:

Elastomeric Bearings shall comply with Item 516 and, Articles 18.2.5 through 18.2.8 of Section 18, Bearing Devices, Division II, Construction of the AASHTO Standard Specification for Highway Bridges. Bearings shall be Grade 3, 50 Durometer Elastomer, and shall be subjected to the load testing requirements corresponding to Design Method A. Testing shall be included in the unit price bid for the bearings, each.

FRAMING PLAN

NOTE:

Place intermediate crossframes, and utility supports normal to beam

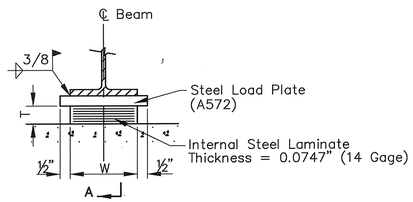

LAMINATED ELASTOMERIC BEARING DETAIL(EXP.)

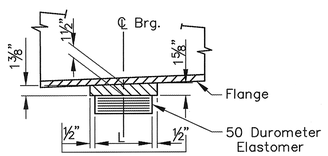

SECTION A–A
(Rear Abutment Shown)
Load Plate At Fwd. Abutment & Pier #2 Is 1½" Thick (Level)

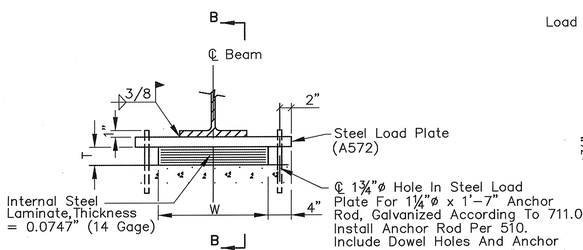

LAMINATED ELASTOMERIC BEARING DETAIL(FIXED)

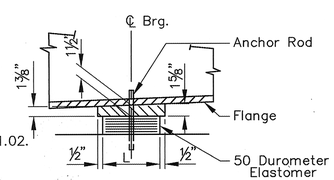

SECTION B–B

SCREED ELEVATIONS **

Location	Elevation Toe of Parapet 31.5' Lt.	Elevation Toe of Barrier 25' Lt.	Elevation ℄ Survey /Bridge	Elevation Toe of Barrier 25' Rt.	Elevation Toe of Parapet 31.5' Rt.
R.Abut. ℄ Brg.	734.90	734.48	734.71	734.15	734.49
1/4 Span	735.35	734.93	735.17	734.63	734.98
1/2 Span	735.74	735.32	735.58	735.05	735.39
3/4 Span	736.06	735.64	735.91	735.40	735.75
Pier 1 ℄ Brg.	736.34	735.93	736.22	735.72	736.08
1/4 Span	736.71	736.30	736.60	736.12	736.48
1/2 Span	736.98	736.58	736.91	736.45	736.81
3/4 Span	737.16	736.76	737.10	736.66	737.03
Pier 2 ℄ Brg.	737.26	736.87	737.24	736.81	737.18
1/4 Span	737.34	736.95	737.33	736.93	737.31
1/2 Span	737.35	736.97	737.37	736.98	736.13
3/4 Span	737.27	736.90	737.32	736.94	737.33
F.Abut. ℄ Brg.	737.11	736.74	737.17	736.82	737.21

** SCREED ELEVATIONS shown are for the deck slab surface and sidewalk prior to concrete placement. Allowance has been made for anticipated calculated dead load deflections.

LAMINATED ELASTOMERIC BEARING DATA

Position	Pad Size (W x L)	te No.–Thk. (In.)	ti No.–Thk. (In.)	Internal Steel Laminate (In.)	Total T (In.)	Load Plate (W x L) (In.)	D.L.	L.L. (No Impact)	Total (D.L.+L.L.)
Rear Abutment	11"x9"	2–.151	4–.212	5–.0747	1½"	12"x10"	33.4 K	48.2 K	81.6 K
Pier #1 (Fixed)	19"x10"	2–.181	7–.254	8–.0747	2¾"	27"x11"	117.6 K	56.2 K	173.8 K
Pier #2	18"x11"	2–.213	4–.298	5–.0747	2"	19"x12"	130.2 K	57.6 K	187.8 K
Fwd. Abutment	11"x9"	2–.151	9–.212	10–.0747	2 15/16"	12"x10"	42.6 K	50.2 K	92.8 K

15 / 23

G & T ASSOCIATES INC. Consulting Engineers
11925 Pearl Rd. Strongsville, Ohio 44136 (216) 572–0555

SUPERSTRUCTURE DETAILS–1
FRAMING PLAN
CITY OF CLEVELAND BRIDGE NO. 4:021C
FAIRHILL ROAD OVER NORFOLK & WESTERN R.R., CONRAIL & G.C.R.T.A.
STA. 15+20.88
CUYAHOGA COUNTY STA. 17+08.70

DESIGNED	DRAWN	TRACED	CHECKED	REVIEWED	DATE	REVISED
DN	VM	——	DJC	CKP	12/94	

Stokes 0031 (4:021) SFN: 1833936

SUPERNZLDWG. PLOT SCALE: 1=96

FHWA REGION	STATE	PROJECT	TYPE FUNDS
5	OHIO		

46
58

CUYAHOGA COUNTY
CUY–FAIRHILL ROAD

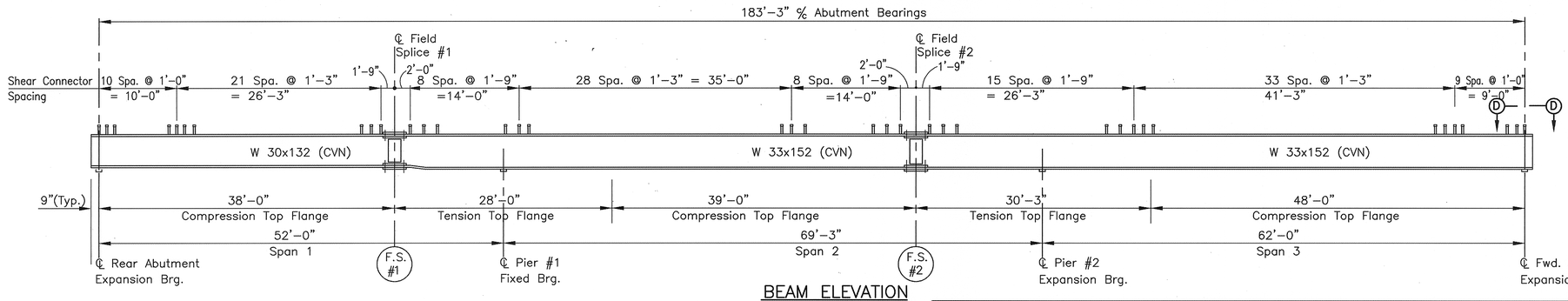

BEAM ELEVATION

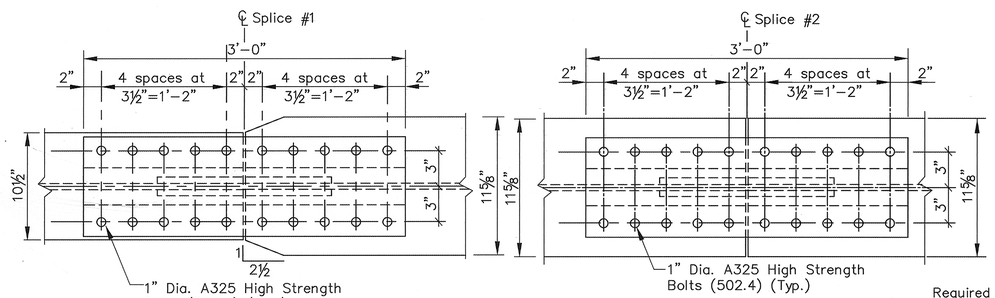

VIEW A–A

VIEW B–B

DEFLECTION AND CAMBER

	SPAN 1				SPAN 2				SPAN 3		
LOCATION	A	B	C	D	E	F	G	H	I	J	K
POINT	¼	½	SPLICE	¾	¼	½	¾	SPLICE	¼	½	¾
DEFLECTION DUE TO WEIGHT OF STEEL	1/16"	1/16"	0"	0"	1/16"	1/16"	0"	0"	1/16"	1/8"	1/16"
DEFLECTION DUE TO REMAINING DEAD LOAD	5/16"	3/8"	3/16"	1/8"	¼"	7/16"	3/16"	3/16"	5/16"	5/8"	½"
ADJUSTMENT REQUIRED FOR VERTICAL CURVE	¾"	15/16"	¾"	¾"	1 5/16"	1 1/16"	1 5/16"	1 5/16"	1"	1 3/8"	1"
REQUIRED SHOP CAMBER	1 1/8"	1 3/8"	15/16"	7/8"	1 5/8"	2 3/16"	1½"	1½"	1 3/8"	2 1/8"	1 9/16"

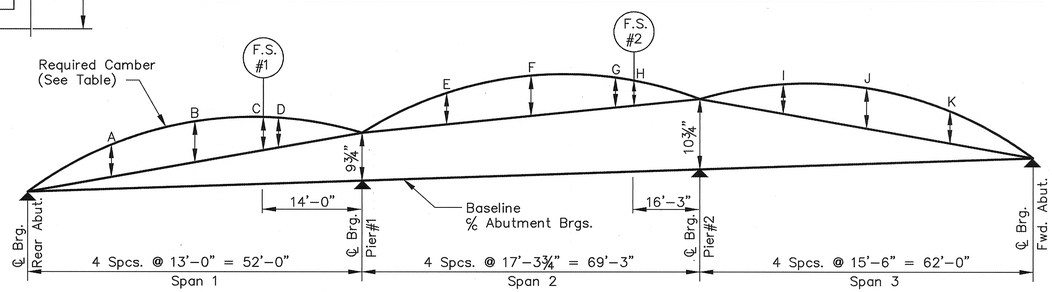

CAMBER DIAGRAM

NOTES:

1. Welded attachment of supports for concrete deck finishing may be made to areas of the fascia stringer flanges designated "compression". Attachments shall not be made to areas designated "tension". Fillet welds to compression flanges shall be not closer than 1" from edge of flange, be not more than 2" long, and be not smaller than the minimum size required by AASHTO.
2. Where a shape or plate is designated (CVN), the material shall meet specified minimum notch toughness requirements ASTM A588 as specified in 711.01 of CMS.
3. For framing plan and bearing details see sht. 15/23
4. For Cross Frame details see sht. 17/23
5. For Expansion Joint & End–Dam details see sht. 18/23
6. For splice details see sht. 17/23
7. A588 STEEL is to be left unpainted. See Supplemental Specification 863 for cleaning requirements. Payment shall be included in Item 863.
8. PARTIAL PAINTING OF A588 STEEL: A 10 foot length from the ends of beams adjacent to abutments, and all cross frames and other A588 steel within these limits shall be painted. Paint shall be System IZEU. The prime coat shall be 708.17. The top coat color shall closely approach Federal Standard No.595a–20045 or 20059 (the color of weathering steel)
9. For location of field splides, see framing plan sheet 15/23
10. Where a shape or plate is designated (CVN) the material shall meet specified minimum notch toughness requirements as specified in 711.01.
11. HIGH STRENGTH BOLTS shall be " diameter A325 unless otherwise noted.

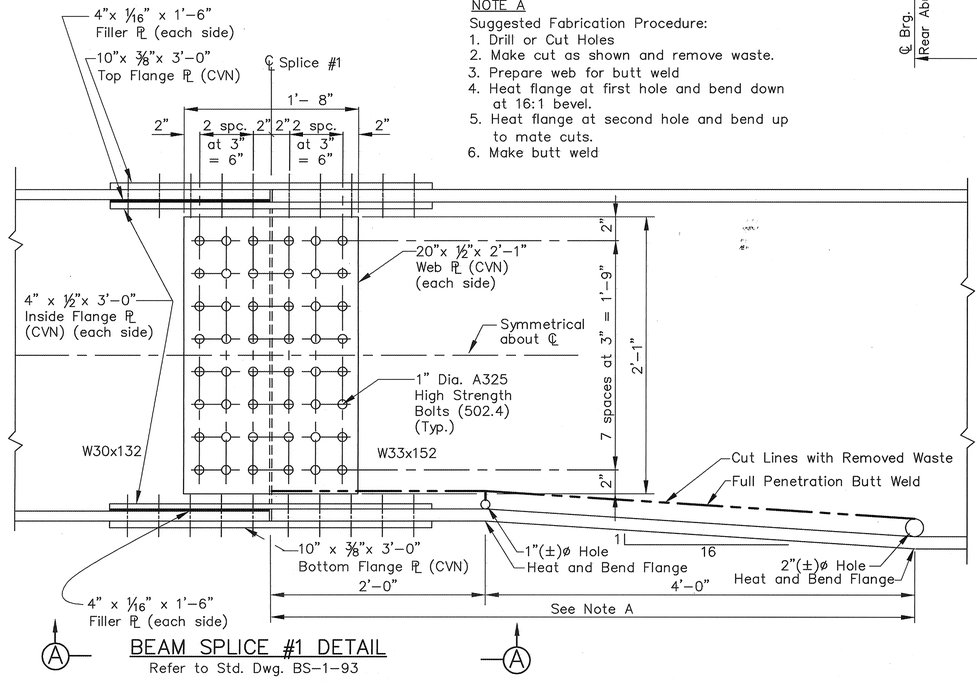

NOTE A
Suggested Fabrication Procedure:
1. Drill or Cut Holes
2. Make cut as shown and remove waste.
3. Prepare web for butt weld
4. Heat flange at first hole and bend down at 16:1 bevel.
5. Heat flange at second hole and bend up to mate cuts.
6. Make butt weld

BEAM SPLICE #1 DETAIL
Refer to Std. Dwg. BS–1–93

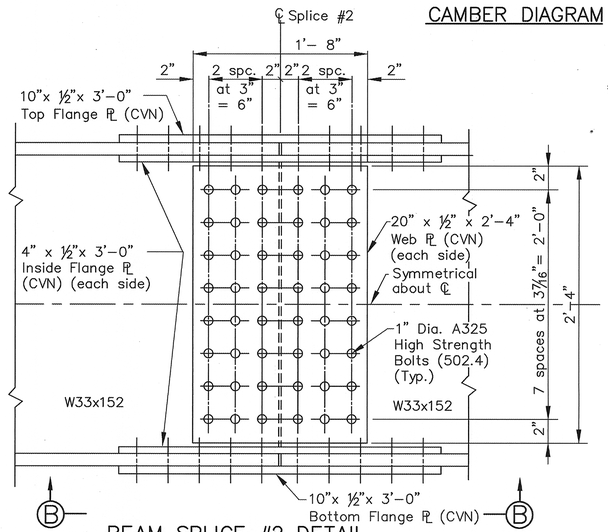

BEAM SPLICE #2 DETAIL
Refer to Std. Dwg. BS–1–93 for fills note

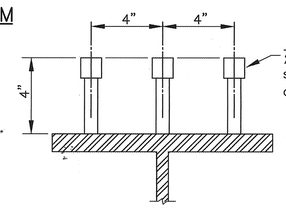

SECTION C–C
TOP FLANGE DETAIL
(Showing Shear Connectors)

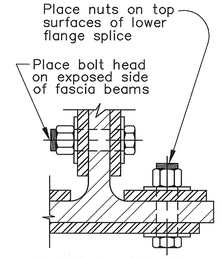

PARTIAL SECTION
(at ℄ of beam splice)

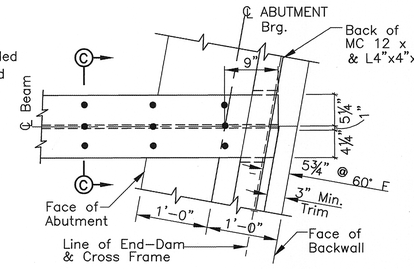

VIEW D–D

16 / 23

G & T ASSOCIATES INC. Consulting Engineers
11925 Pearl Rd. Strongsville, Ohio 44136 (216) 572–0555

SUPERSTRUCTURE DETAILS–2
BEAM DETAILS
CITY OF CLEVELAND BRIDGE NO. 4:021C
FAIRHILL ROAD OVER NORFOLK & WESTERN R.R., CONRAIL & G.C.R.T.A.
CUYAHOGA COUNTY STA. 15+20.88 STA. 17+08.70

DESIGNED	DRAWN	TRACED	CHECKED	REVIEWED	DATE	REVISED
DN	VM	——	DJC	CKP	12/94	

Stokes 0031 (4:021) SFN: 1833936

FHWA REGION	STATE	PROJECT	TYPE FUNDS
5	OHIO		

47
58

CUYAHOGA COUNTY
CUY–FAIRHILL ROAD

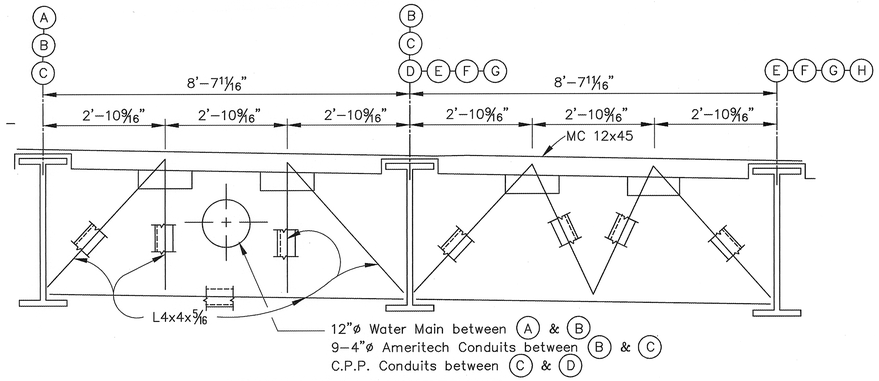

SPECIAL END CROSSFRAME

For additional details refer to std. Dwg. EXJ–4–87.

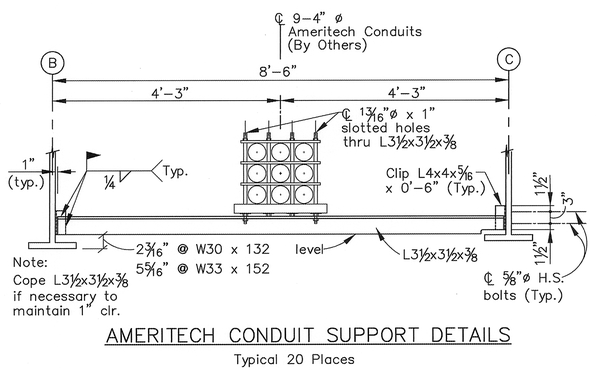

AMERITECH CONDUIT SUPPORT DETAILS

Typical 20 Places

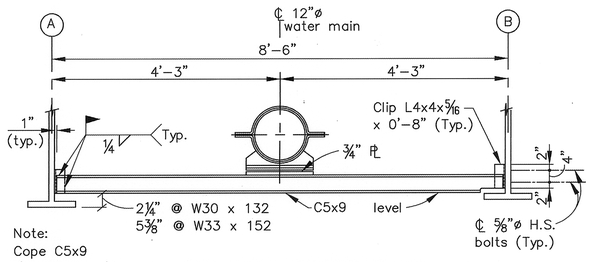

WATER MAIN SUPPORT DETAILS

Typical 20 Places
For Additional Details, See Sheet 15/23

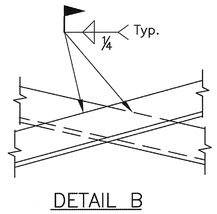

DETAIL B

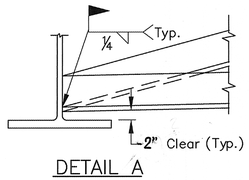

DETAIL A

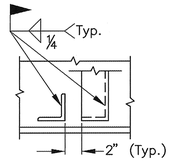

SECTION A–A

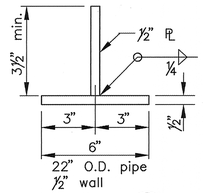

SECTION S2

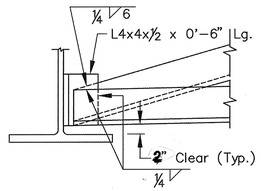

DETAIL C

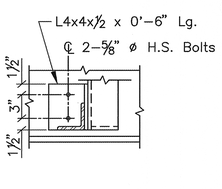

SECTION B–B

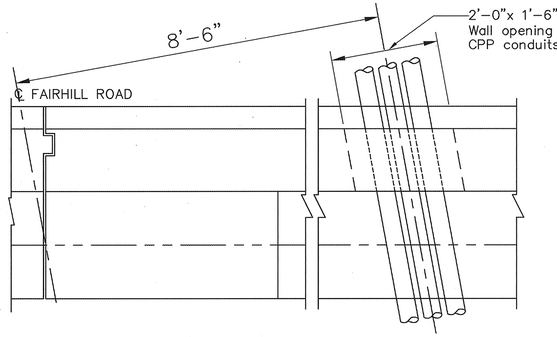

CPP CONDUIT SUPPORT ABUTMENT PLAN

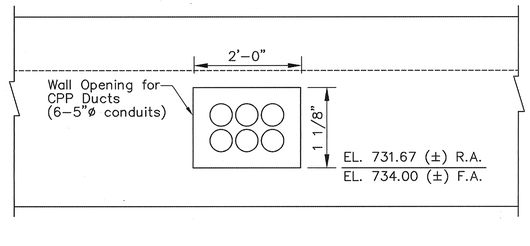

CPP CONDUIT SUPPORT ABUTMENT ELEVATION

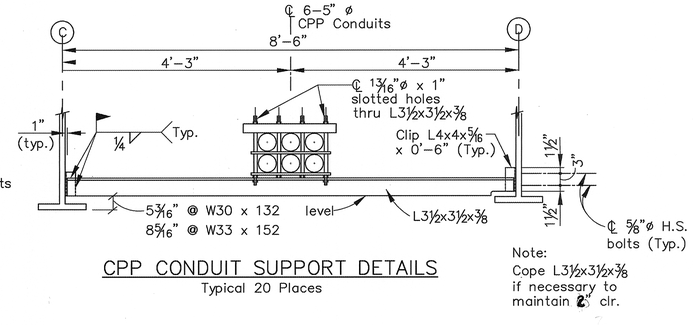

CPP CONDUIT SUPPORT DETAILS

Typical 20 Places

CPP CONDUITS DETAILS

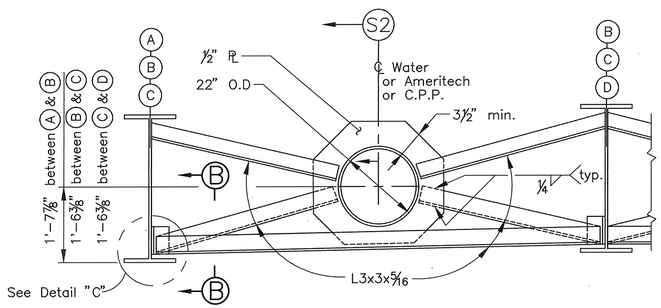

SPECIAL INTERMEDIATE CROSSFRAME DETAIL (@ W33 x 152)

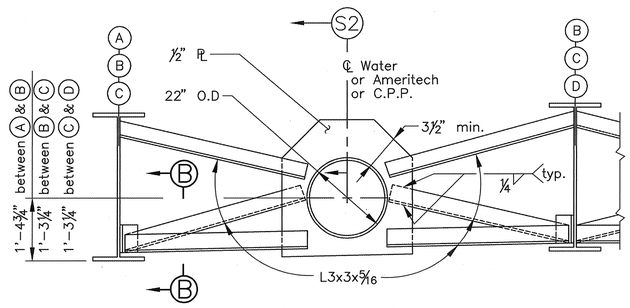

SPECIAL INTERMEDIATE CROSSFRAME DETAIL (@ W30 x 132)

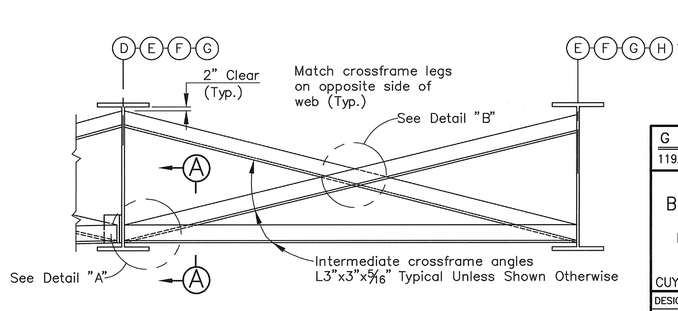

INTERMEDIATE CROSSFRAME DETAIL

17 / 23

G & T ASSOCIATES INC. Consulting Engineers
11925 Pearl Rd. Strongsville, Ohio 44136 (216) 572–0555

SUPERSTRUCTURE DETAILS–3
BEAM SPLICE & CROSS FRAME DETAILS

CITY OF CLEVELAND BRIDGE NO. 4:021C
FAIRHILL ROAD OVER NORFOLK & WESTERN R.R., CONRAIL & G.C.R.T.A.
CUYAHOGA COUNTY
STA. 15+20.88
STA. 17+08.70

DESIGNED	DRAWN	TRACED	CHECKED	REVIEWED	DATE	REVISED
DN	VM	—	DJC	CKP	12/94	

Stokes 0031 (4:021) SFN: 1833936

SUPERSTRUCTURE DETAILS-3 1of1

FHWA REGION	STATE	PROJECT	TYPE FUNDS
5	OHIO		

48
58

CUYAHOGA COUNTY
CUY–FAIRHILL ROAD

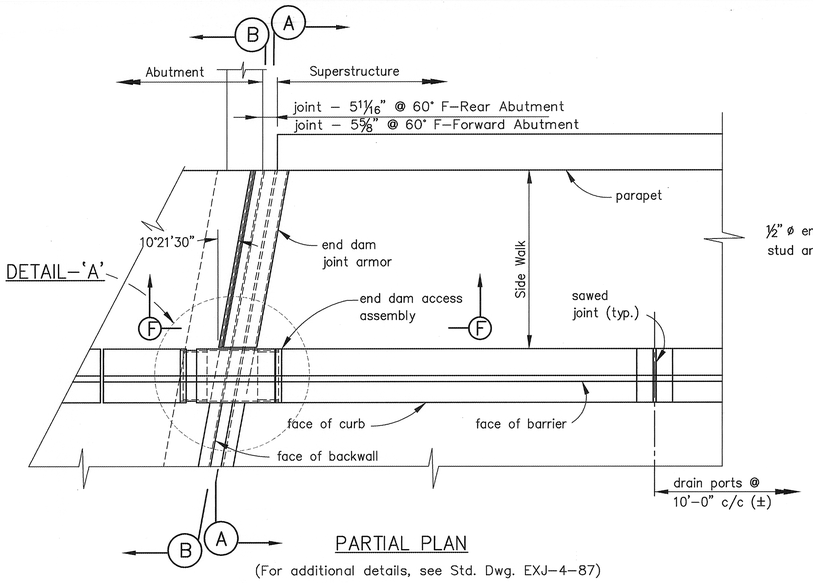

PARTIAL PLAN

(For additional details, see Std. Dwg. EXJ–4–87)

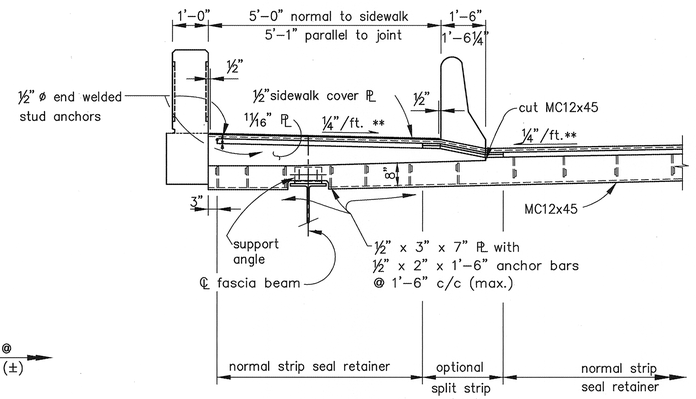

SECTION A–A

** Measured normal to ℄ Fairhill Rd.

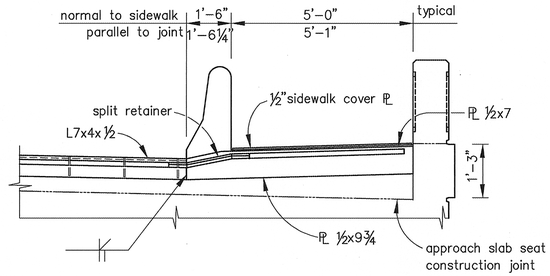

SECTION B–B

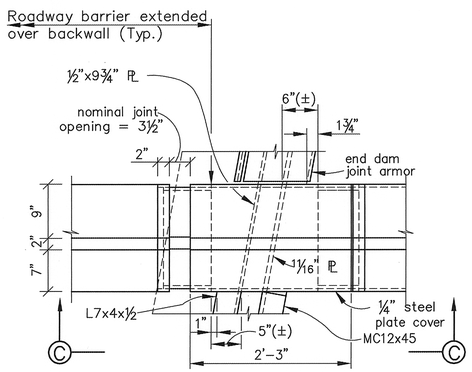

DETAIL–'A'

(Concrete Barrier @ Expansion Joint)

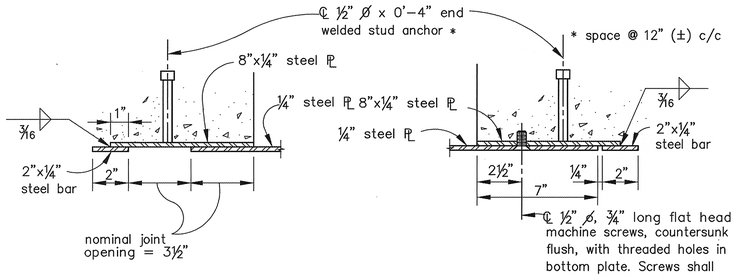

SECTION D–D

Rear Abutment

TABLE A⊙
Joint Opening vs. Temperature

DIMENSION A	TEMPERATURE °F
1 13/16"	30°
1 3/4"	40°
1 3/4"	50°
1 11/16"	60°
1 5/8"	70°
1 5/8"	80°
1 9/16"	90°

Fwd. Abutment

TABLE A⊙
Joint Opening vs. Temperature

DIMENSION A	TEMPERATURE °F
1 7/8"	30°
1 13/16"	40°
1 11/16"	50°
1 5/8"	60°
1 1/2"	70°
1 3/8"	80°
1 5/16"	90°

The strip seal shall have a 3" rating.

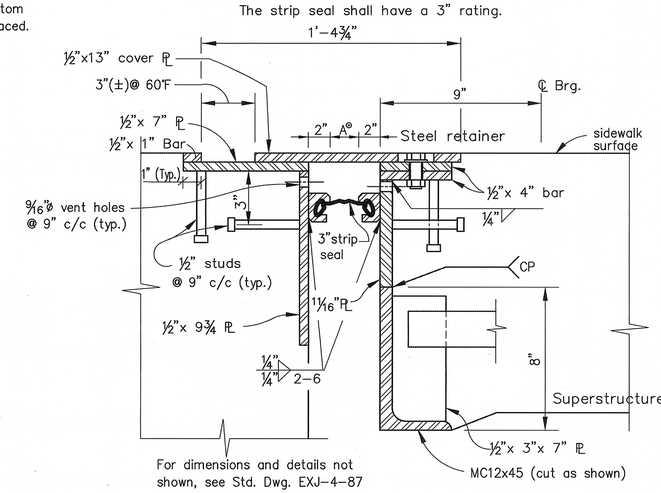

SECTION F–F

(@ sidewalk)

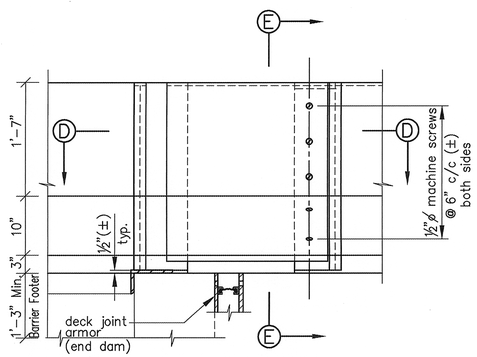

VIEW C–C

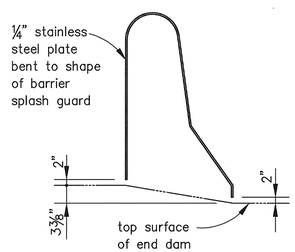

SECTION E–E

NOTES:

This drawing provides details of a barrier splash guard, the purpose of which is to provide protection to pedestrians using the bridge sidewalks.

For spacing of barrier deflection joints see sheet 20/23.
The purpose of the end dam access assembly is to provide access for maintenance of the bridge deck joint (end dam) and continuity of the barrier splash guard.

The end dam access assembly shall be fabricated from A–36 steel and shall be painted in accordance with Item 514, System IZEU, using corrosion resistant gray finish paint as per section 708.08 for the finish coat.
Cost of barrier splash guard between joints at back of abutment backwalls, including the cost of the end dam access assembly, shall be included in the price bid for Item 511, Class 'S' Concrete, Superstructure, As Per Plan.

Cost of barrier splash guard beyond back of abutment backwall is included with roadway quantities for payment.

18 / 23

G & T ASSOCIATES INC. Consulting Engineers
11925 Pearl Rd. Strongsville, Ohio 44136 (216) 572–0555

SUPERSTRUCTURE DETAILS–4
EXPANSION JOINT DETAILS
CITY OF CLEVELAND BRIDGE NO. 4:021C
FAIRHILL ROAD OVER NORFOLK & WESTERN R.R., CONRAIL & G.C.R.T.A.
CUYAHOGA COUNTY STA. 15+20.88 STA. 17+08.70

DESIGNED	DRAWN	TRACED	CHECKED	REVIEWED	DATE	REVISED
DN	VM	——	DJC	CKP	12/94	

Stokes 0031 (4:021) SFN: 1833936

SURFACE DWG. PLOT SCALE: 1=24

FHWA REGION	STATE	PROJECT	TYPE FUNDS	49 / 58
5	OHIO			

CUYAHOGA COUNTY
CUY–FAIRHILL ROAD

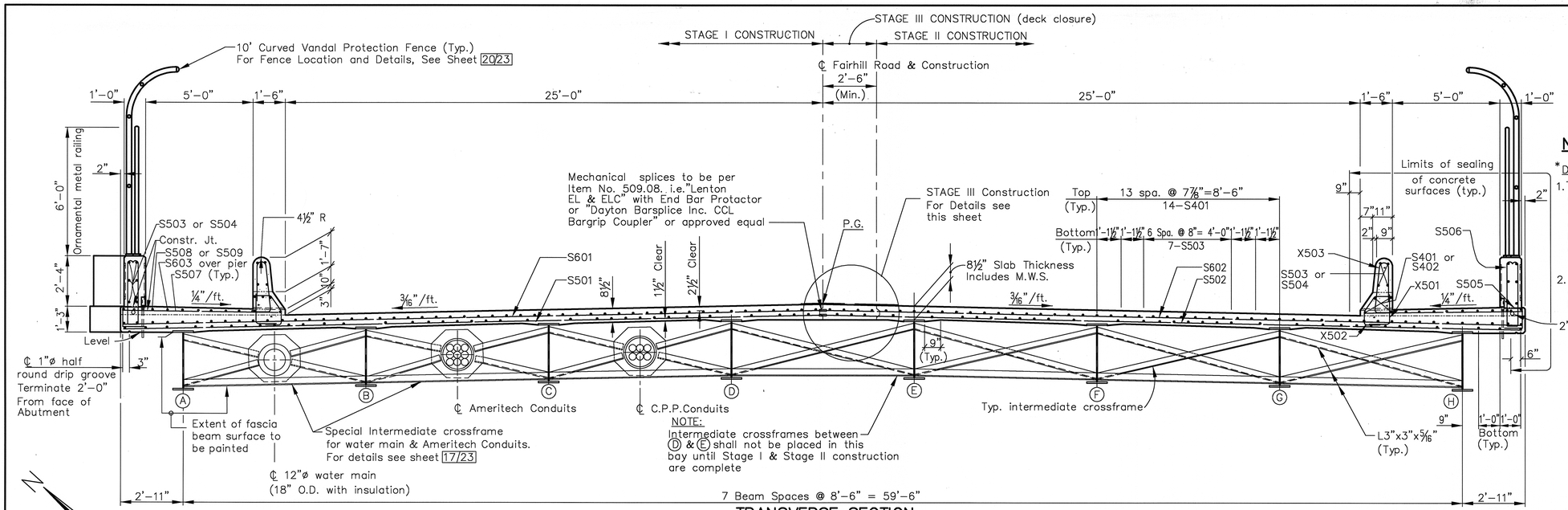

TRANSVERSE SECTION
(At midspan)

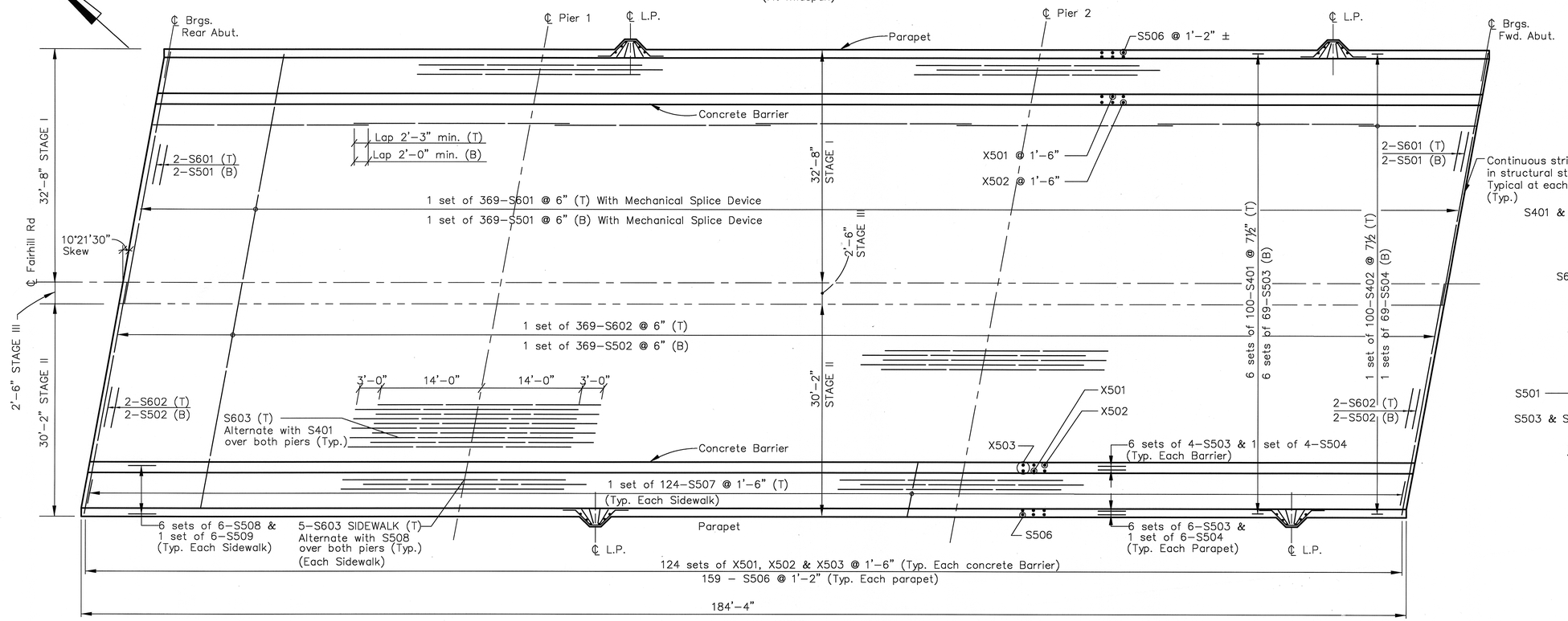

PLAN – SUPERSTRUCTURE SLAB REINFORCING

NOTES:

*Deck Slab Depth:

1. The distance shown from the top of the deck slab to the top of steel beam is the theoretical design dimension. The quantity of deck concrete to be paid for shall be based upon this dimension, even though deviation from it may be necessary because the top flange of the beam may not have the exact camber or conformation required to place it parallel to the finished grade.
2. A HAUNCH WIDTH of 9 inches shall be used for computing quantity of concrete. However, the haunch width may vary between 6 and 12 inches.

REFERENCES:

1. For deck screed elevations, see sheet 15/23
2. For framing plan, see sheet 15/23
3. For railing details, see sheet 20/23
4. For reinforcing schedule, see sheet 21/23
5. For Lightpole details see sheet 20/23
6. For Expansion joint details see sheet 18/23

LEGEND:

n.f. = near face	El. = Elevation
f.f. = far face	B.W. = both way
e.f. = each face	Typ. = Typical
(T) = Top	C.J. = Construction joint
(B) = Bottom	M.W.S. = Monolithic Wearing Surface

REQUIRED LAP LENGTHS

4 Bar = 2'–3"
5 Bar = 2'–0"
6 Bar = 2'–6"
} Unless Shown Otherwise

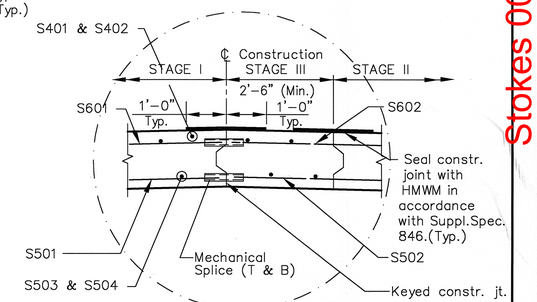

STAGE III CONSTRUCTION DETAIL

19 / 23

G & T ASSOCIATES INC.	Consulting Engineers
11925 Pearl Rd. Strongsville, Ohio 44136	(216) 572–0555

SUPERSTRUCTURE DETAILS–5
DECK SLAB DETAILS
CITY OF CLEVELAND BRIDGE NO. 4:021C
FAIRHILL ROAD OVER NORFOLK & WESTERN R.R., CONRAIL & G.C.R.T.A.
CUYAHOGA COUNTY
STA. 15+20.88
STA. 17+08.70

DESIGNED	DRAWN	TRACED	CHECKED	REVIEWED	DATE	REVISED
DN	VM	——	DJC	CKP	12/94	

Stokes 0031 (4:021) SFN: 1833936

FHWA REGION	STATE	PROJECT	TYPE FUNDS	50 / 58
5	OHIO			

CUYAHOGA COUNTY
CUY–FAIRHILL ROAD

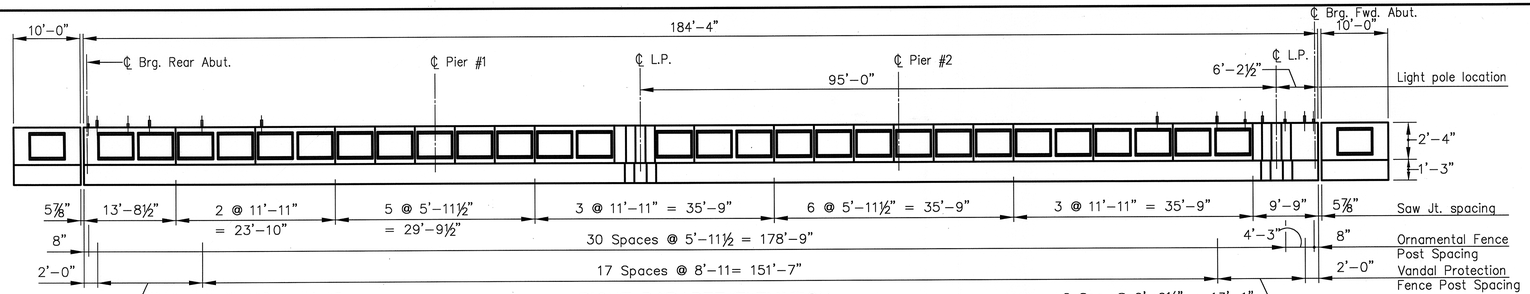

RIGHT PARAPET ELEVATION

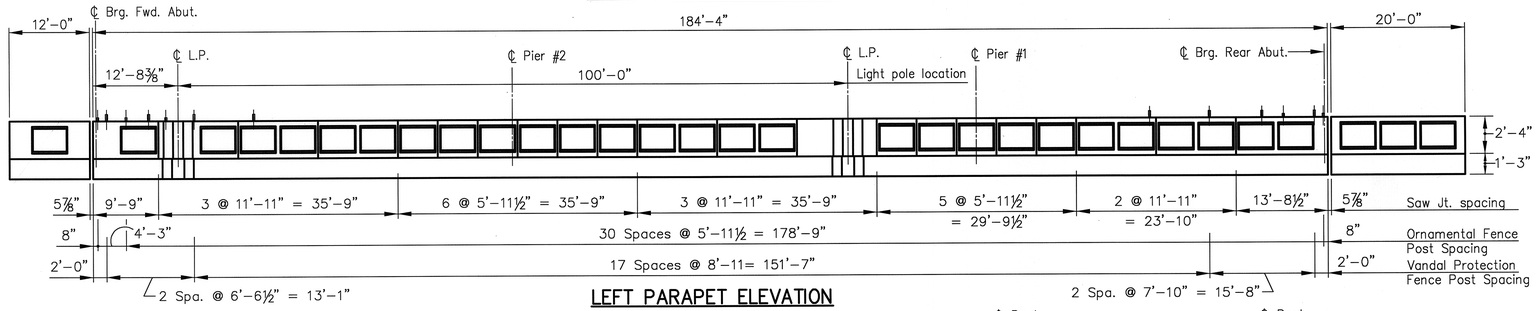

LEFT PARAPET ELEVATION

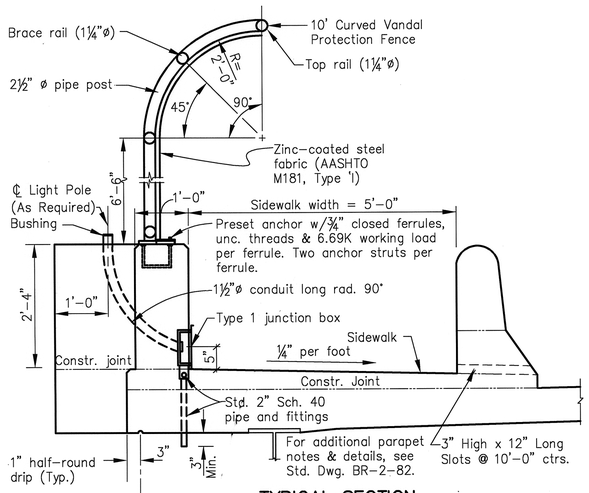

TYPICAL SECTION
(Light Post Pilaster & Vandal Protection Fence)

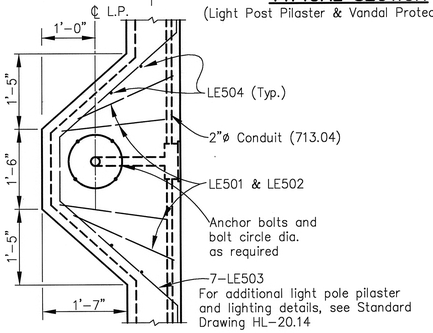

PLAN AT LIGHT POLE PILASTER

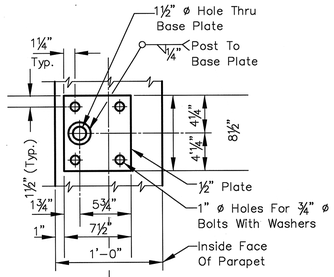

PLAN
(Vandal Protection Fence Post Base Plate)

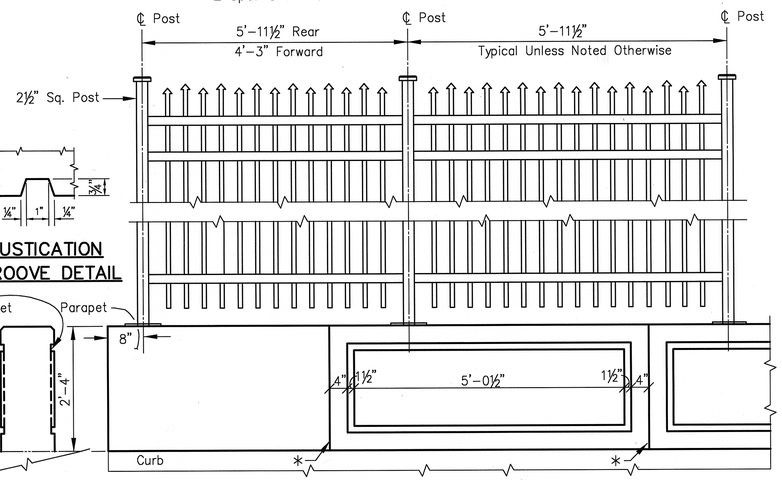

RUSTICATION GROOVE DETAIL

ORNAMENTAL ALUMINUM FENCE
(Jerith Industrial Strength Style #100 – 6'–0" Height)

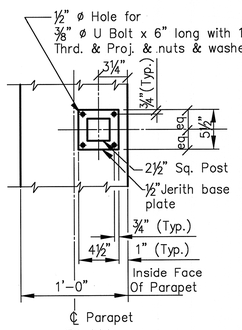

PLAN
(Jerith Fence Post Base Plate)
(For additional information, refer to manufacturer's specifications)

REINFORCING LIST PER PILASTER
(All Bars Shall Be Epoxy Coated)

MARK	NUMBER Reqd.	LENGTH	TYPE	DIMENSIONS A	B	C	D
LE501	4	3'–10"	1	1'–0"	2'–1"		
LE502	4	8'–6"	1	3'–4"	2'–1"		
LE503	7	8'–0"	2	2'–1"	1'–4"	2'–1"	0'–6"
LE504	4	3'–4"	Str.				

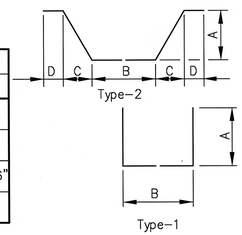

NOTES:

1. **ITEM 517 – RAILING, MISC.: ORNAMENTAL METAL RAILING**

This item shall conform to the requirements and specifications for Industrial Strength Aluminum Ornamental Fence as manufactured by Jerith Manufacturing Company, 3901 G Street, Philadelphia, PA 19124. The fence shall be Jerith Style #100 with a picket length of 6 feet. The materials, finishing, and fence mounting details shall conform to the manufacturer's specifications and shall be approved by the Engineer.

PAYMENT

Payment for the fence shall be made at the unit price bid for Item 517 – Railing, Misc.: Ornamental Metal Railing. This price shall include all fence material, fence post anchor plates, and anchors and all labor, equipment, and incidentals necessary to complete the fencing. Payment length will be the overall length of the fence.

2. **ITEM SPECIAL - VANDAL PROTECTION FENCE, 10'CURVED OR 6'STRAIGHT, COATED FABRIC**

This item includes the furnishing of all materials, labor, equipment and incidentals necessary to complete the fencing. Tension bands shall be a minimum of 12 gauge steel by 7/8 inches wide assembled with 5/16 inch diameter by 1 1/4 inch galvanized or cadmium plated bolts. One tension band shall be required for each foot of fabric height. Fence end posts shall be 3" ø and line posts shall be 2½ ø and Brace Rail size shall be 1¼" ø. Fence posts and ancor bolts shall be vertical. Rails shall be parallel to grade. The fabric and rails shall be free to expand or contract across bridge expansion joints. Materials and workmanship shall meet the requirements of Item 517 except that aluminum alloy posts and base plates shall not be used. Fabric ties shall be spaced 14 inch c/c maximum on line or end posts and 24 inch c/c maximum on all rails. All posts and pipe sizes are noted in terms of the nominal inside dia–meter of standard weight pipe, Schedule 40. Stretcher bars and miscellaneous hard–ware shall be that of the chain link fence industry standard. Base plates and miscellaneous brackets for steel posts may be of any commercially weldable steel having a yield strength of not less than 33,000 p.s.i.

Fence fabric for vandal protection fencing shall have a 1–inch mesh and be vinyl covered of a uniformly medium green color. Fabric shall be zinc–coated steel (AASHTO M–181, Type 1). Post steel shall have a minimum yield strength of 30 k.s.i.

PAYMENT:

Payment for the fence shall be made at the unit price bid for Item SPECIAL–VANDAL PROTECTION FENCE, 10'CURVED OR 6'STRAIGHT, COATED FABRIC. This price shall include all fence material, fence post anchor plates and anchors and all labor, equipment and incidentals necessary to complete the fencing.

Fence shall conform to the requirements of 710.03 and ODOT standard drawing VPF–1–90M except as modified on this sheet.

Payment length will be the overall length of the fence.

3. Cost of parapet shall be included in the bid price for Item 842 Class S Concrete, Superstructure or Item 842 Class C Concrete, Abutment Not Including Footings.

4. Rustication panels shall be 5'–11 1/2" length of equal size along the entire length of the sidewalk parapet, on each side of the parapet.

REFERENCES:

1. For Rear Abutment fence post spacings see sht. 10/23
2. For Forward Abutment fence post spacings see sht. 12/23
3. For Slab Details see sht. 19/23
4. For Expansion Joint Details see sht. 18/23

20 / 23

G & T ASSOCIATES INC. Consulting Engineers
11925 Pearl Rd. Strongsville, Ohio 44136 (216) 572–0555

SUPERSTRUCTURE DETAILS–6 RAILINGS DETAILS

CITY OF CLEVELAND BRIDGE NO. 4:021C
FAIRHILL ROAD OVER NORFOLK & WESTERN R.R., CONRAIL & G.C.R.T.A.
STA. 15+20.88
CUYAHOGA COUNTY STA. 17+08.70

DESIGNED	DRAWN	TRACED	CHECKED	REVIEWED	DATE	REVISED
DN	VM	——	DJC	CKP	12/94	

SFN: 1833936
Stokes 0031 (4:021)

SUPER7.DWG PLOT SCALE: 1=1

FHWA REGION	STATE	PROJECT	TYPE FUNDS
5	OHIO		

51
58

CUYAHOGA COUNTY
CUY–FAIRHILL ROAD

MARK	NUMBER REAR	NUMBER FWD.	NUMBER TOTAL	LENGTH	SER. INCR.	WEIGHT	TYPE	DIMENSIONS A	B	C	D	E	F	G	H	R	R1	INC.
SUPERSTRUCTURE																		
S401			600	30'–0"		12024	Str											
S402			100	17'–9"		1186	Str											
S501			373	32'–10"		12774	Str								With Mechanical Splicing Device			
S502			373	31'–10"		12384	Str											
S503			510	30'–0"		15958	Str											
S504			89	16'–3"		1508	Str											
S505			248	2'–3"		582	6	0'–10"	0'–10"									
S506			318	7'–1"		2348	11	3'–0"	0'–7"									
S507			248	7'–4"		1909	Str											
S508			72	30'–0"		2268	Str											
S509			12	16'–3"		211	Str											
S601			369	32'–10"		18198	Str								With Mechanical Splicing Device			
S602			369	31'–10"		17643	Str											
S603			218	31'–0"		10150	Str											
X501			248	2'–2"		560	5	1'–5"	0'–10½"									
X502			248	2'–11"		755	43	0'–10½"	0'–8½"	0'–10⅜"	0'–9"							17
X503			248	5'–3"		1358	58	0'–7½"	2'–5"	2'–2"						2⅛"		1¼
					TOTAL	111816												
	PIER 1	PIER 2						PIERS 1 & 2										
P501	36	38	74	40'–0"		3088	Str											
P502	40	42	82	5'–7"		478	6	1'–8"	2'–8"									
P503	12	12	24	15'–4"		384	48	1'–8"	12'–2"	1'–8"								24
P504	1 Ser	2 Ser	3 Ser	12'–7"	0'–3"	1228	10	2'–11"	2'–8"									
	of 22	of 22	of 22	to 23'–1"		–	–	to 8'–2"										
P505	81	81	162	19'–5"		3281	6	8'–6"	2'–8"									
P506	6	6	12	22'–4"		279	Str											
P507	6	6	12	20'–4"		254	Str											
P508	2 Ser	2 Ser	4 Ser	25'–4"		355	Str											
	of 3	of 3	of 3	to 31'–4"		–												
P509	2 Ser	2 Ser	4 Ser	23'–4"		330	Str											
	of 3	of 3	of 3	to 29'–4"		–												
P510	2	2	4	33'–4"		139	Str											
P511	2	2	4	31'–4"		131	Str											
P512	1 Ser	–	1 Ser	12'–2"		400	10											
	of 22	–	of 22	to 22'–8"		–												
P513	2	2	4	6'–7"		27	5	4'–9"	2'–0"									
P514	2	–	2	28'–11"		61	Str											
P515	–	2	2	30'–1"		63	Str											
P801	15	15	30	30'–0"		2403	Str											
P802	88	88	176	10'–6"		4934	1	8'–8"										
P803	15	15	30	17'–8"		1415	Str											
P901	12	12	24	33'–8"		2747	5	2'–8"	31'–4"									
P902	12	12	24	23'–0"		1877	5	2'–8"	20'–8"									
P903	6	6	12	20'–0"		816	Str											
P1001	140	140	280	10'–7"		12747	5	2'–0"	8'–11"									
P1002	140	–	140	28'–11"		17422	Str											
P1003	–	140	140	30'–1"		18123	Str											
					TOTAL	72,982												

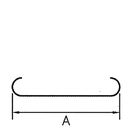

TYPE – 1

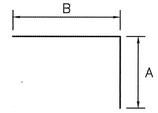

TYPE – 5

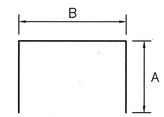

TYPE – 6

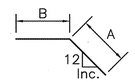

TYPE – 9

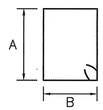

TYPE – 10

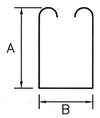

TYPE – 11

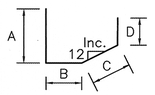

TYPE – 43

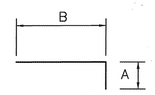

TYPE – 49

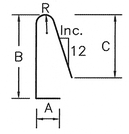

TYPE – 58

TYPE – 59

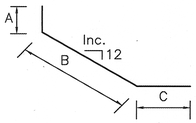

TYPE – 48

NOTES:

All reinforcing steel is to be epoxy coated.
Refer to CMS 509.05 for Std. bend dimensions not shown.

Bar size is indicated in the bar mark. The first digit where three digits are used, and the first two digits where four are used, indicate the bar size number; for example, A700 is a No. 7 and A1014 is a No. 10 size. Bar dimensions shown are out to out unless otherwise indicated. R indicates inside radius, unless otherwise noted. "STD" written in place of a dimension indicates a standard bend at the end of the bar.

REFERENCE:

1. For Slab reinforcement see sht. 19/23 .
2. For Pier #1 & #2 reinforcement see sht. 14/23 .
3. For Estimated quantities see sht. 7/23 .

21 / 23

G & T ASSOCIATES INC. Consulting Engineers
11925 Pearl Rd. Strongsville, Ohio 44136 (216) 572–0555

REINFORCEMENT SCHEDULE–1

CITY OF CLEVELAND BRIDGE NO. 4:021C
FAIRHILL ROAD OVER NORFOLK & WESTERN R.R., CONRAIL & G.C.R.T.A.
CUYAHOGA COUNTY STA. 15+20.88 STA. 17+08.70

DESIGNED	DRAWN	TRACED	CHECKED	REVIEWED	DATE	REVISED
DN	VM	——	DJC	CKP	12/94	

Stokes 0031 (4:021) SFN: 1833936

FHWA REGION	STATE	PROJECT	TYPE FUNDS	52 / 58
5	OHIO			

CUYAHOGA COUNTY
CUY–FAIRHILL ROAD

MARK	NUMBER			LENGTH	SER. INCR.	WEIGHT	TYPE	DIMENSIONS										
	REAR	FWD.	TOTAL					A	B	C	D	E	F	G	H	R	R1	INC.
REAR ABUTMENT																		
RA400			80	4'–6"		240	6	1'–0"	2'–8"									
RA500			58	5'–0"		302	5	1'–8"	3'–5"									
RA501			25	40'–0"		1043	Str											
RA502			25	40'–0"		1043	Str											
RA503			18	8'–8"		163	6	4'–2"	0'–7"									
RA504			12	13'–5"		168	Str											
RA505			28	2'–2"		85	Str											
RA506			4	18'–5"		103	Str											
RA507			56	3'–9"		219	5	0'–6"	3'–4"									
RA508			16	17'–10"		297	Str											
RA509			56	4'–3"		248	Str											
RA510			28	8'–1"		236	11	3'–5"	0'–7"									
RA511			2	5'–11"		12	Str											
RA512			8	8'–11"		74	27	2'–0"	1'–5"	5'–9"								
RA513			2	17'–3"		36	6	5'–9"	5'–11"									
RA514			4	15'–0"		63	6	5'–9"	3'–5"									
RA515			6	12'–8"		80	6	5'–9"	1'–5"									
RA516			16	7'–10"		131	Str											
RA517			4	8'–5"		35	Str											
RA518			4	14'–11"		62	Str											
RA519			24	4'–6"		113	Str											
RA520			2	13'–3"		28	6	3'–9"	5'–11"									
RA521			4	11'–0"		46	6	3'–9"	3'–5"									
RA522			6	8'–8"		54	6	3'–9"	1'–5"									
RA523			2	28'–6"		59	Str											
RA524			2	27'–3"		57	Str											
RA600			82	9'–10"		1211	5	7'–4"	2'–8"									
RA601			82	4'–0"		493	Str.											
RA602			81	9'–9"		1186	6	4'–4"	1'–5"									
RA603			53	5'–9"		458	6	2'–4"	1'–5"									
RA604			53	6'–11"		551	6	3'–2"	0'–11"									
RA605			10	7'–7"		114	6	3'–3"	1'–5"									
RA606			82	9'–7"		1180	5	4'–4"	5'–5"									
RA800			36	4'–11"		473	8	1'–5"	2'–8"									9
					TOTAL	10663												

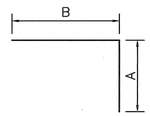

TYPE – 5

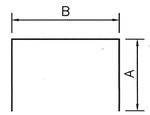

TYPE – 6

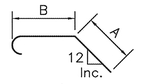

TYPE – 8

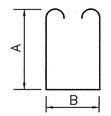

TYPE – 11

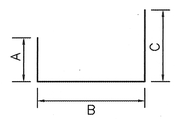

TYPE – 27

NOTES:

All reinforcing steel is to be epoxy coated.
Refer to CMS 509.05 for Std. bend dimensions not shown.

Bar size is indicated in the bar mark. The first digit where three digits are used, and the first two digits where four are used, indicate the bar size number; for example, A700 is a No. 7 and A1014 is a No. 10 size. Bar dimensions shown are out to out unless otherwise indicated. R indicates inside radius, unless otherwise noted. "STD" written in place of a dimension indicates a standard bend at the end of the bar.

REFERENCE:

1. For Rear Abutment reinforcement see sht. 12/23.
2. For Estimated quantities see sht. 7/23.

22 / 23

G & T ASSOCIATES INC. Consulting Engineers
11925 Pearl Rd. Strongsville, Ohio 44136 (216) 572–0555

REINFORCEMENT SCHEDULE–2

CITY OF CLEVELAND BRIDGE NO. 4:021C
FAIRHILL ROAD OVER NORFOLK & WESTERN R.R., CONRAIL & G.C.R.T.A.
STA. 15+20.88
CUYAHOGA COUNTY STA. 17+08.70

DESIGNED	DRAWN	TRACED	CHECKED	REVIEWED	DATE	REVISED
DN	VM	——	DJC	CKP	12/94	

Stokes 0031 (4:021) SFN: 1833936

REBARN2.DWG, PLOT SCALE: 1=1

MARK	NUMBER			LENGTH	SER. INCR.	WEIGHT	TYPE	DIMENSIONS										
	REAR	FWD.	TOTAL					A	B	C	D	E	F	G	H	R	R1	INC.
FORWARD ABUTMENT																		
FA401			80	4'–6"		240	6	1'–0"	2'–8"									
FA501			112	16'–11"		1977	10	3'–4"	4'–5"									
FA502			65	14'–6"		983	6	5'–8"	3'–5"									
FA503			12	34'–3"		429	Str.											
FA504			12	31'–6"		395	Str.											
FA505			28	11'–0"		321	Str.											
FA506			65	10'–4"		700	6	3'–7"	3'–5"									
FA507			4	15'–6"		65	Str.											
FA508			2	29'–6"		62	Str.											
FA509			2	26'–9"		56	Str.											
FA510			12	8'–7"		107	Str.											
FA511			12	4'–5"		55	9	2'–3"	2'–3"									2
FA512			12	4'–5"		55	49	2'–3"	2'–3"									2
FA513			18	8'–1"		152	11	3'–5"	0'–7"									
FA514			24	4'–6"		113	Str.											
FA515			7	6'–5"		47	5	1'–3"	5'–4"									
FA516			4	3'–8"		15	Str.											
FA517			4	6'–7"		27	Str.											
FA518			1	5'–1"		5	Str.											
FA519			1	7'–1"		7	Str.											
FA520			11	11'–8"		134	Str											
FA521			10	7'–8"		80	Str.											
FA522			1 Ser	10'–3"	0'–6"	64	11	4'–1"	1'–5"									
			of 5	to 14'–3"				to 6'–1"										
FA523			6	8'–10"		55	6	3'–10"	1'–5"									
FA524			24	7'–11"		198	11	3'–4"	0'–7"									
FA525			1 Ser	10'–3"	0'–6"	49	11	4'–1"	1'–5"									
			of 4	to 13'–3"				to 5'–7"										
FA526			1	5'–0"		5	Str											
FA527			1	7'–0"		7	Str											
FA528			11	9'–8"		10	Str											
FA601			19	21'–1"		602	6	10'–0"	1'–5"									
FA602			68	6'–1"		621	6	2'–6"	1'–5"									
FA603			62	9'–3"		861	6	4'–2"	1'–5"									
FA604			12	8'–7"		155	6	3'–9"	1'–5"									
FA605			50	8'–1"		607	6	3'–9"	0'–11"									
FA701			6	7'–5"		91	5	1'–3"	6'–4"									
FA702			4	7'–8"		63	Str											
FA703			4	3'–8"		30	Str											
FA704			1	5'–1"		10	Str											
FA705			1	7'–1"		14	Str											
FA706			5	11'–8"		119	Str											
FA707			5	7'–9"		79	Str											
FA708			1	5'–0"		10	Str											
FA709			1	7'–0"		14	Str											
FA710			5	9'–8"		99	Str											
FA801			5	38'–0"		507	Str											
FA802			5	31'–6"		421	Str											
FA803			35	4'–11"		66	8	1'–5"	2'–8"									12
FA901			8	12'–8"		345	9	8'–0"	5'–0"									2¼
FA902			8	10'–8"		290	49	6'–0"	5'–0"									2¼
FA1001			20	40'–0"		3442	Str											
FA1002			10	16'–0"		689	Str											
FA1003			10	11'–9"		506	6	3'–0"	6'–5"									
					TOTAL	16054												
DRILLED SHAFTS																		
DS1001			72	27'–4"		*	Str											
SFA501			6	27'–4"		*	51											

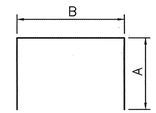

TYPE – 6

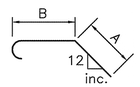

TYPE – 8

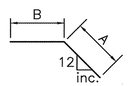

TYPE – 9

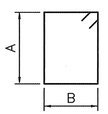

TYPE – 10

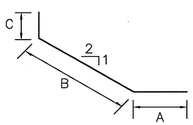

TYPE – 48

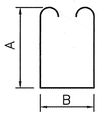

TYPE – 11

TYPE – 49

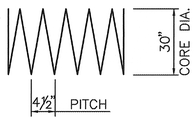

TYPE – 51

* Included with Item Special–Drilled Shafts, for payment

FHWA REGION	STATE	PROJECT	TYPE FUNDS
5	OHIO		

53
58

CUYAHOGA COUNTY
CUY–FAIRHILL ROAD

NOTES:

All reinforcing steel is to be epoxy coated.
Refer to CMS 509.05 for Std. bend dimensions not shown.

Bar size is indicated in the bar mark. The first digit where three digits are used, and the first two digits where four are used, indicate the bar size number; for example, A700 is a No. 7 and A1014 is a No. 10 size. Bar dimensions shown are out to out unless otherwise indicated. R indicates inside radius, unless otherwise noted. "STD" written in place of a dimension indicates a standard bend at the end of the bar.

REFERENCE:

1. For Forward Abutment reinforcement see sht. 13/23 .
2. For Estimated quantities see sht. 7/23 .

23/23

G & T ASSOCIATES INC. Consulting Engineers
11925 Pearl Rd. Strongsville, Ohio 44136 (216) 572–0555

REINFORCEMENT SCHEDULE–3
CITY OF CLEVELAND BRIDGE NO. 4:021C
FAIRHILL ROAD OVER NORFOLK & WESTERN R.R., CONRAIL & G.C.R.T.A.
CUYAHOGA COUNTY STA. 15+20.88 STA. 17+08.70

DESIGNED	DRAWN	TRACED	CHECKED	REVIEWED	DATE	REVISED
DN	VM	——	DJC	CKP	12/94	

Stokes 0031 (4:021) SFN: 1833936

REBARNS.DWG, PLOT SCALE: 1=1

CUYAHOGA COUNTY CUY–STOKES BLVD.	OHIO FHWA REGION 5
BHM–1B43(2)	FEDERAL PROJECT
PID NO. 8800	STATE JOB NO. 120500

STATE OF OHIO
DEPARTMENT OF TRANSPORTATION
CUY-STOKES BOULEVARD
CITY OF CLEVELAND
CUYAHOGA COUNTY
RIGHT OF WAY

PROJECT DESCRIPTION:
IMPROVEMENT OF 0.13 MILES OF STOKES BOULEVARD BY THE RECONSTRUCTION OF EXISTING SEPARATED CROSSING WITH THE CONSOLIDATED RAIL CORPORATION, NORFOLK AND WESTERN RAILWAY CO., & GREATER CLEVELAND REGIONAL TRANSIT AUTHORITY. INCLUDING APPROACH RECONSTRUCTION.

CONVENTIONAL SIGNS

County Line
Township Line
Section Line
Corporation Line
Fence Line (existing) —X—X— (proposed)
Center Line 200 201 202
Trees , Stumps , (to be removed)
Catch Basin
(existing) (proposed) (adjust/reconstruct)
Manhole
(existing) (proposed) (adjust/reconstruct)

Limited Access (only) LA
Right of Way (only) R/W
Limited Acces & Right of Way LA – R/W
Existing Right of Way EXIST. R/W
Construction Limits CONSTR. LIMITS
Property Line (in existing fence)
Railroad or
Guardrail (existing) (proposed)
Utility Poles: Telephone, Power, Light

INDEX OF SHEETS

TITLE SHEET	
CENTERLINE SURVEY PLAT	1
PROPERTY MAP	2
SUMMARY SHEET	3
DETAILED PLAN SHEETS	4–5

UNDERGROUND UTILITIES
TWO WORKING DAYS
BEFORE YOU DIG
Call...800–362–2764 (Toll Free)
OHIO UTILITES PROTECTION SERVICE
NON–MEMBERS
MUST BE CALLED DIRECTLY

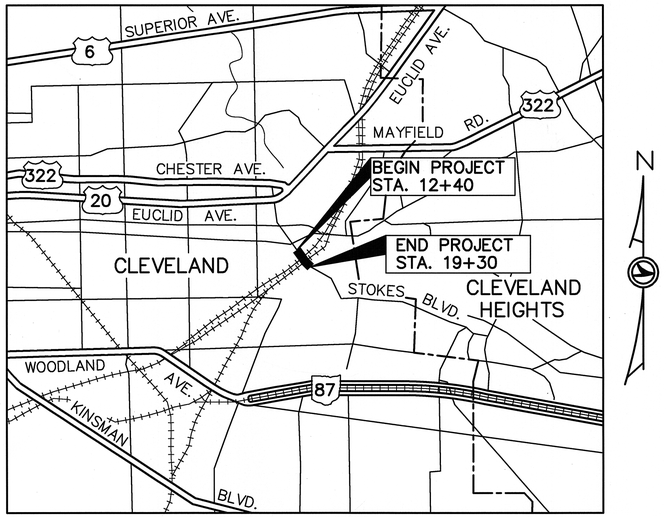

LOCATION MAP
SCALE IN MILES
0 1 2 3 4
PORTION TO BE IMPROVED
U.S. & STATE ROUTES 322 87
OTHER ROADS

PLAN: 0 20 40
SCALE IN FEET

ACQUIRING AGENCY: STATE OF OHIO

1997 SPECIFICATIONS

The standard specifications of the State of Ohio, Department of Transportation, including changes and supplemental specifications listed in the proposal shall govern this improvement.

I hereby approve these plans and declare that the making of this improvement will not require the closing to traffic of the highway and that provisions for the maintenance and safety of traffic will be as set forth on the plans and estimates.

Approved _____
Date _____ District Deputy Director of Transportation

DEPARTMENT OF TRANSPORTATION
FEDERAL HIGHWAY ADMINISTRATION
APPROVED
_____ _____
DIVISION ADMINISTRATOR DATE

PID# 8800
DATE OF LETTING _____
DATE OF COMPLETION _____
CONSTRUCTED BY _____

Plans Prepared By:
STILSON & ASSOCIATES, INC.
614 Superior Ave., NW
Cleveland, Ohio 44113
216–771–1090

Stokes 0031 (4:021) SFN: 1833936

CENTERLINE SURVEY PLAT

CUY - STOKES BOULEVARD

CUYAHOGA COUNTY

CITY OF CLEVELAND

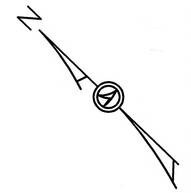

0 100 200
SCALE IN FEET

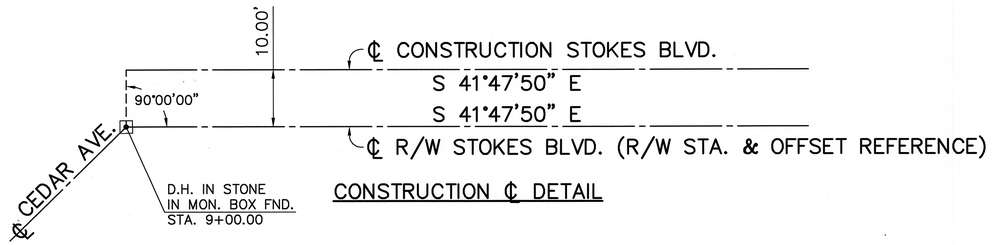

CONSTRUCTION ℄ DETAIL

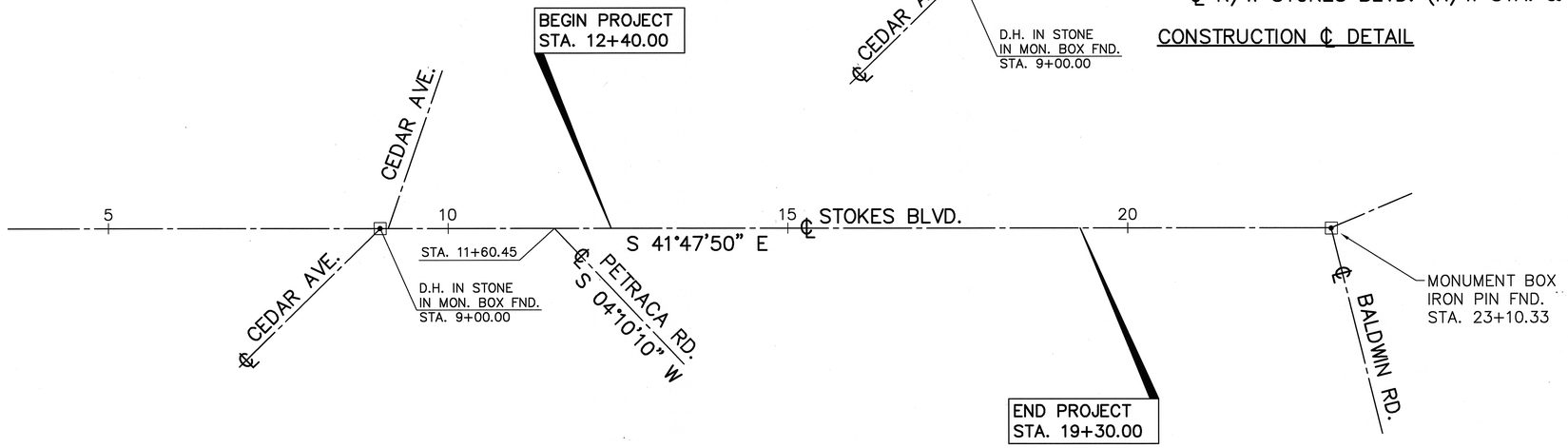

BASIS FOR BEARINGS:

ALL BEARINGS SHOWN ARE FOR PROJECT USE ONLY. THESE BEARINGS ARE TO AN ASSUMED MERIDIAN AND ARE USED TO DELINEATE ANGLES ONLY.

I HEREBY CERTIFY THAT THIS PLAT IS A TRUE DELINEATION OF A SURVEY MADE FOR THE OHIO DEPARTMENT OF TRANSPORTATION IN 1992.

George R. Ericsson — 9/9/00

REGISTERED SURVEYOR No. 6748 — DATE

STATE OF OHIO · GEORGE ROBERTS ERICSSON · S-6748 · REGISTERED LAND SURVEYOR

RECIEVED _____, 19____
RECORDED _____, 19____
BOOK _____ PAGE _____
_____
COUNTY RECORDER

Stokes 0031 (4:021) SFN: 1833936

PROPERTY MAP

CUY - STOKES BOULEVARD

CUYAHOGA COUNTY

CITY OF CLEVELAND

CUYAHOGA COUNTY	OHIO	55/58
CUY – STOKES BLVD.	FHWA REGION 5	2/5

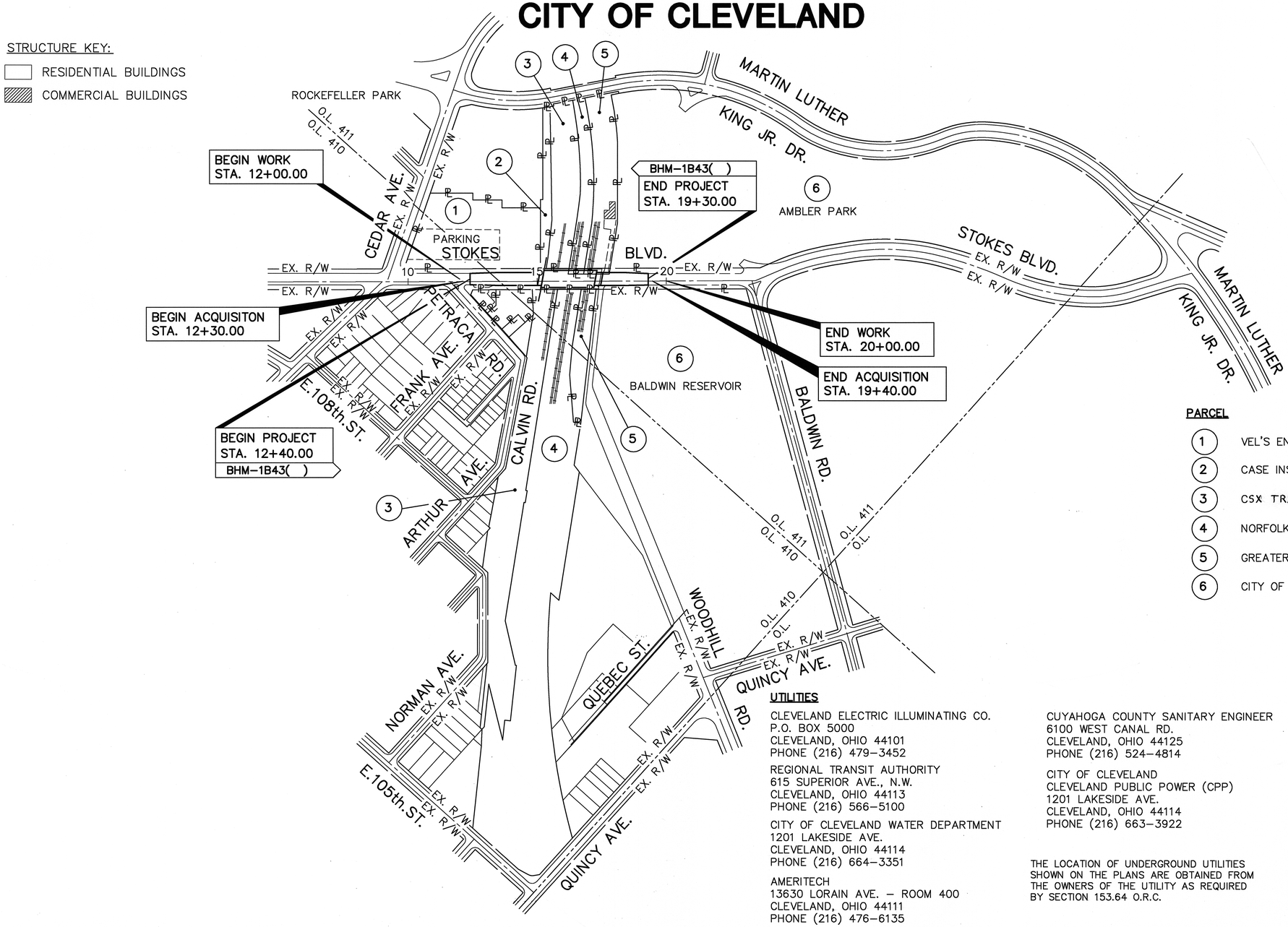

PARCEL — **OWNER**

1. VEL'S ENTERTAINMENT COMPLEX, INC.
2. CASE INSTITUTE OF TECHNOLOGY
3. CSX TRANSPORTATION INC.
4. NORFOLK AND WESTERN RAILWAY COMPANY
5. GREATER CLEVELAND REGIONAL TRANSIT AUTHORITY
6. CITY OF CLEVELAND

UTILITIES

CLEVELAND ELECTRIC ILLUMINATING CO.
P.O. BOX 5000
CLEVELAND, OHIO 44101
PHONE (216) 479–3452

REGIONAL TRANSIT AUTHORITY
615 SUPERIOR AVE., N.W.
CLEVELAND, OHIO 44113
PHONE (216) 566–5100

CITY OF CLEVELAND WATER DEPARTMENT
1201 LAKESIDE AVE.
CLEVELAND, OHIO 44114
PHONE (216) 664–3351

AMERITECH
13630 LORAIN AVE. – ROOM 400
CLEVELAND, OHIO 44111
PHONE (216) 476–6135

CUYAHOGA COUNTY SANITARY ENGINEER
6100 WEST CANAL RD.
CLEVELAND, OHIO 44125
PHONE (216) 524–4814

CITY OF CLEVELAND
CLEVELAND PUBLIC POWER (CPP)
1201 LAKESIDE AVE.
CLEVELAND, OHIO 44114
PHONE (216) 663–3922

THE LOCATION OF UNDERGROUND UTILITIES SHOWN ON THE PLANS ARE OBTAINED FROM THE OWNERS OF THE UTILITY AS REQUIRED BY SECTION 153.64 O.R.C.

REV.	DATE	DESCRIPTION
1	4-12-99	PCL 3 CHANGED OWNER

DATE OF COMPLETION

Stokes 0031 (4:021) SFN: 1833936

CALC. BY		CUYAHOGA COUNTY	OHIO
DATE		CUY –STOKES BLVD.	FHWA REGION 5
CHKD. BY			
DATE			

56
58

3
5

No. OF OWNERS 6
No. OF TOTAL TAKES 0
No. OF STRUCTURES 0

SUMMARY OF ADDITIONAL RIGHT OF WAY

STATE JOB No. 120500
P.I.D. No. 8800

PARCEL No.	OWNER	SHEET No.	OWNERS RECORD BOOK	OWNERS RECORD PAGE	AUDITOR'S PARCEL	RECORD AREA (S.F.)	TOTAL P.R.O.	GROSS TAKE	P.R.O. IN TAKE	NET TAKE	STRUC-TURE	NET RESIDUE LEFT	NET RESIDUE RIGHT	TYPE FUND	REMARKS AND PERSONALTY	AS ACQUIRED BOOK	AS ACQUIRED PAGE
1T	VEL'S ENTERTAINMENT COMPLEX INC.	4–5	855409	54	121–25–07 to 10	128,990	0	4928		4928	NO			STATE	CONSTRUCT SLOPES		
					121–25–14 to 20												
					121–25–37												
2T	CASE INSTITUTE OF TECHNOLOGY	5	11850	709	121–27–09	21,529	0	472		472	NO			STATE	CONSTRUCT SLOPES		
3T	CSX TRANSPORTATION INC., A VIRGINIA	5	98-8456	21	121–27–03	——		2770		2770	NO			STATE	REPAIR WALL AND CONSTRUCT SLOPES		
3T–1	CORPORATION	5			121–27–02			2368		2368	NO			STATE	REPAIR WALL AND CONSTRUCT SLOPES		
4T	NORFOLK AND WESTERN RAILWAY COMPANY	5	11345	267	121–27–04	——		1393		1393	NO			STATE	PIER DEMOLITION AND CONSTRUCT SLOPES		
4T–1		5			121–27–32			2741		2741	NO			STATE	PIER DEMOLITION AND CONSTRUCT SLOPES		
5T	GREATER CLEVELAND REGIONAL TRANSIT AUTHORITY	5	13869	547	121–27–07	68,100	1,985	2729		2729	NO			STATE	PIER DEMOLITION, CONSTRUCT CRIBWALL, CONSTRUCT SLOPES		
5T–1		5			121–27–08	28,867	0	2641		2641	NO			STATE	PIER DEMOLITION, CONSTRUCT CRIBWALL, CONSTRUCT SLOPES		
6WA	CITY OF CLEVELAND	5	2901	552	121–28–001	——		2277		2277	NO			STATE	CONSTRUCT DRIVE AND GRADE SLOPES		
6WA–1		5			121–29–001			4155		4155	NO			STATE	CONSTRUCT DRIVE AND GRADE SLOPES		

NOTE: ALL TEMPORARY PARCELS TO BE OF 12 MONTH DURATION

REV.	DATE	DESCRIPTION
1	4-12-99	PCL 3 CHANGED OWNER
DATE OF COMPLETION		

SUMMARY OF ADDITIONAL RIGHT OF WAY

Stokes 0031 (4:021) SFN: 1833936

CALC. BY		CUYAHOGA COUNTY	OHIO
DATE			
CHKD. BY		CUY – STOKES BLVD.	FHWA REGION 5
DATE			

57/58

4/5

(1)

VEL'S ENTERTAINMENT COMPLEX, INC.
121–25–7–10,14–20,37

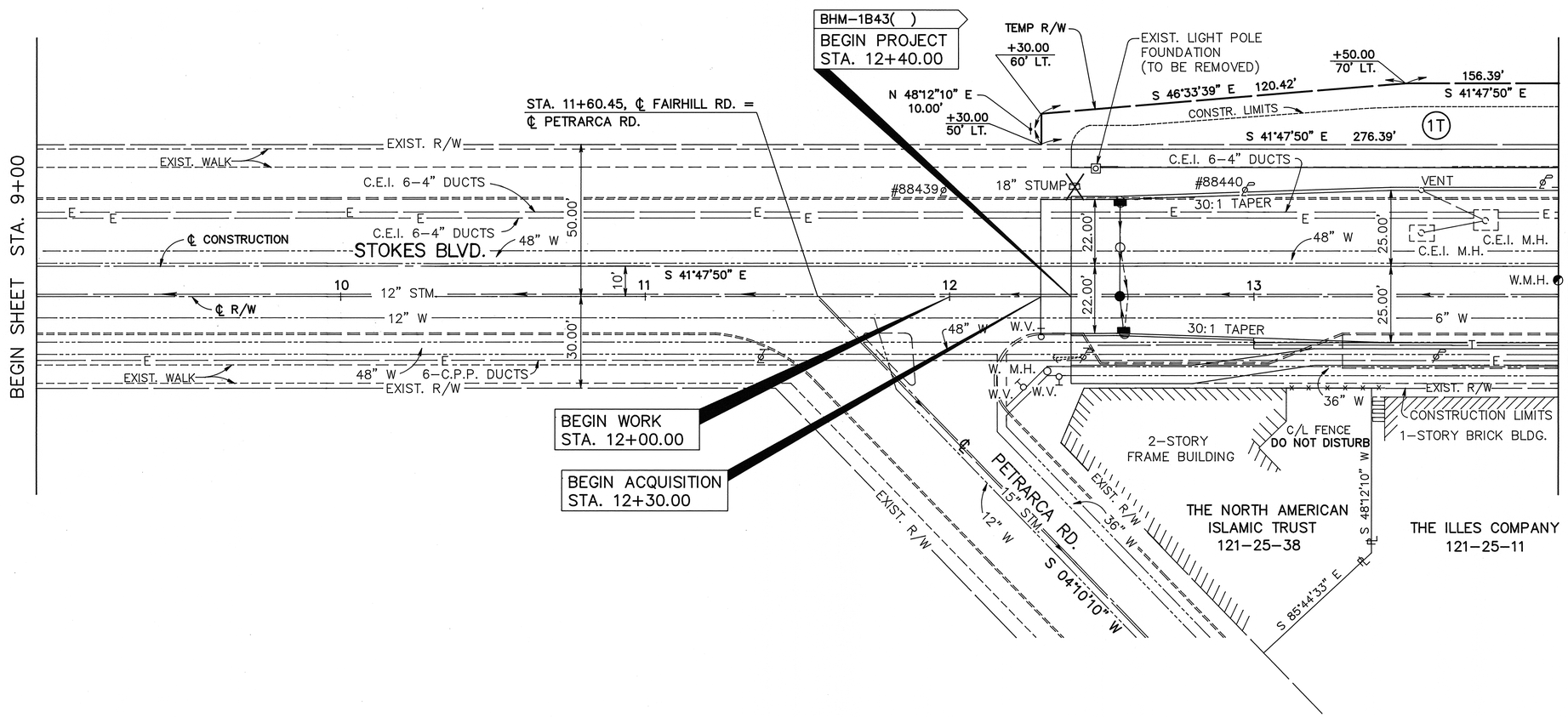

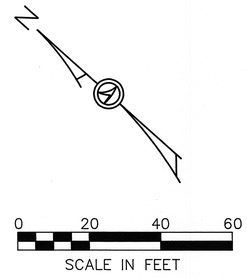

REV.	DATE	DESCRIPTION
DATE OF COMPLETION		

RIGHT OF WAY PLAN STA. 9+00 TO STA. 14+00

Stokes 0031 (4:021) SFN: 1833936

CALC. BY	CUYAHOGA COUNTY	OHIO	58 / 58
DATE	CUY – STOKES BLVD.	FHWA REGION 5	5 / 5
CHKD. BY			
DATE			

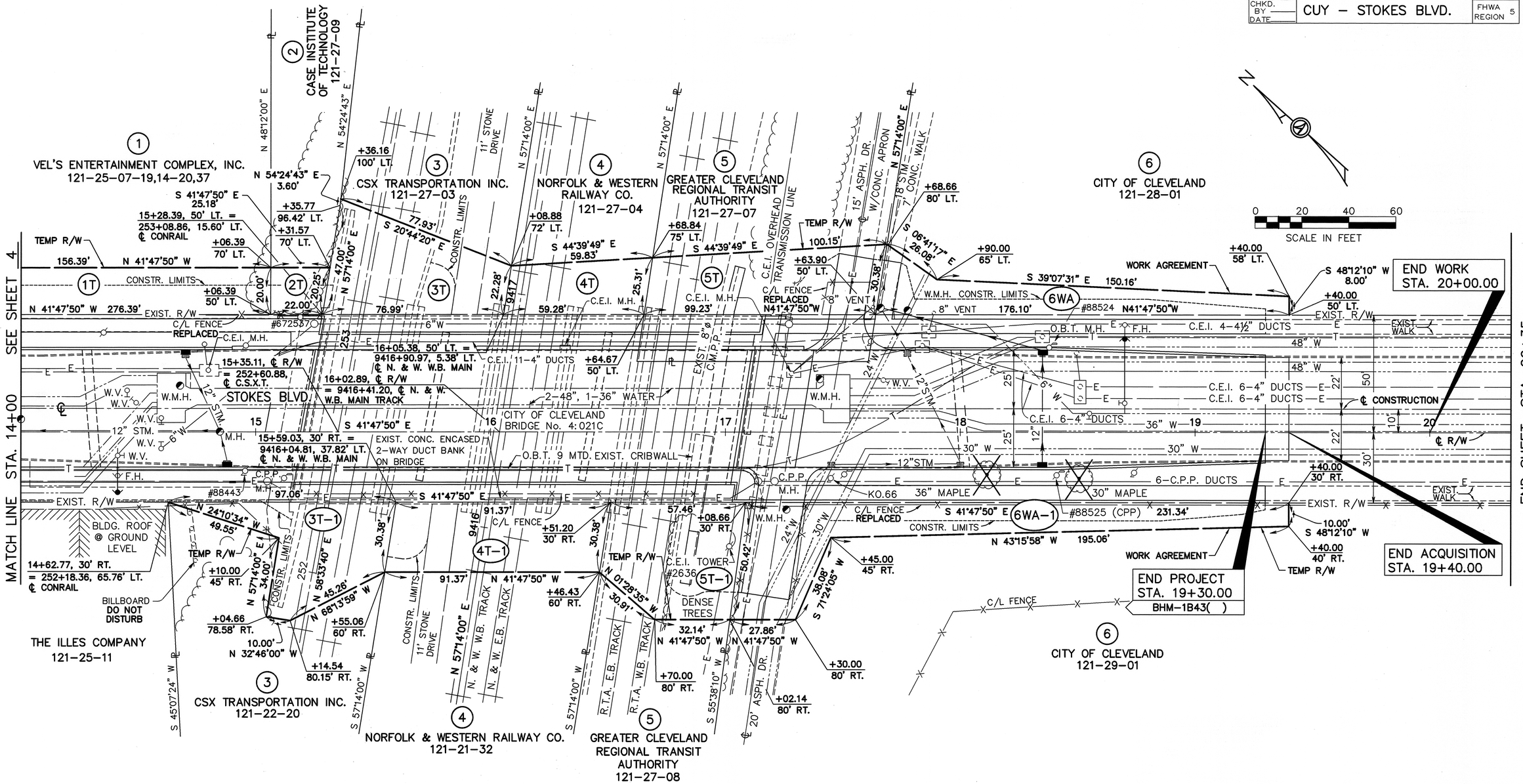

REV.	DATE	DESCRIPTION
1	4-12-99	PCL 3 CHANGED OWNER

DATE OF COMPLETION

RIGHT OF WAY PLAN STA. 14+00 TO STA. 20+35

Stokes 0031 (4:021) SFN: 1833936

FHWA REGION	STATE	PROJECT

SOIL PROFILE

1/3

GEOLOGY OF THE SITE

THE PROJECT SITE LIES ON THE ESCARPMENT BETWEEN THE LAKE PLAIN AND THE ALLEGHENY PLATEAU PHYSIOGRAPHIC PROVINCES IN THE VICINITY WHERE DOAN BROOK CROSSES CEDAR ROAD IN CLEVELAND, OHIO. THE SITE LIES AT AN APPROXIMATE ELEVATION 731 NEAR THE EAST OF THE BRIDGE AND 735 NEAR THE WEST OF BRIDGE. THE EXISTING BRIDGE SPANS OVER NORTHFOLK AND SOUTHERN, CONRAIL, AND THE G.C.R.T.A. RAILWAYS IN CUYAHOGA COUNTY, OHIO.

THE WISCONSIN ICE SHEET PASSED OVER THE AREA LEAVING IN GENERAL A VERY THIN LAYER OF GLACIAL DRIFT MATERIAL AVERAGING LESS THAN 25 FEET IN THICKNESS. THE CUYAHOGA COUNTY SOIL SURVEY, DECEMBER, 1980, INDICATES THAT THREE(3) MAIN SOIL GROUPS, THE URBAN LAND-ELNORA COMPLEX, THE URBAN LAND-MITIWANGA COMPLEX AND THE LOUDONVILLE-URBAN LAND COMPLEX, ARE PRESENT IN THE VICINITY OF THE SITE.

THE OHIO GEOLOGICAL SURVEY INDICATES THAT THE BEDROCK STANDS AT APPROXIMATE ELEVATIONS RANGING FROM 700 TO 725. AT THESE ELEVATIONS IT IS EXPECTED THAT BEDROCK IS COMPRISED OF LATE DEVONIAN AGE SHALES OF THE OLENTANGY FORMATION.

EXPLORATION

THE SUBSURFACE EXPLORATION PROGRAM FOR THIS PROJECT INCLUDED ADVANCING A TOTAL OF FOUR (4) DRIVE SAMPLE CORE BORINGS WITH A CME-45C TRUCK MOUNTED DRILLING RIG USING CONVENTIONAL 3.25 INCH I.D. HOLLOW STEM AUGERS, PERFORMED DURING SEPTEMBER, 1989. ALL THE TEST BORINGS WERE ADVANCED FOR FOUNDATION DESIGN PURPOSES.

INVESTIGATIONAL FINDINGS

TEST BORINGS B-1 AND B-4 WERE ADVANCED BEHIND THE ABUTMENTS THROUGH THE EXISTING ASPHALT, BRICK AND CONCRETE PAVEMENT AT THE BRIDGE. THE ASPHALT MEASURED APPROXIMATELY FOUR (4) INCHES THICK, BRICKS MEASURED APPROXIMATELY FOUR (4) INCHES THICK AND THE CONCRETE MEASURED APPROXIMATELY SIX (6) INCHES THICK. TEST LOCATIONS B-2 AND B-3 WERE ADVANCED THROUGH THE RAILROAD BASE GRAVEL, WHICH WAS ONE (1) TO TWO (2) FEET IN THICKNESS.

THE SOILS ENCOUNTERED WITHIN THE EXPLORED DEPTHS CONSISTED PREDOMINANTLY OF SAND CLASSIFIED AS A-3a. THE RELATIVE DENSITY OF THE NON-COHESIVE SOILS WAS FOUND TO VARY FROM "MEDIUM DENSE" TO "LOOSE". SHALE BEDROCK WAS ENCOUNTERED AT ALL TEST BORING LOCATIONS AT DEPTHS RANGING FROM TWO (2) TO TWENTY-SEVEN (27) FEET BELOW THE EXISTING GRADE. THE ROCK QUALITY DESIGNATION (RQD) OF THE SHALE WAS FOUND TO RANGE FROM 25 TO 35 PERCENT BUT PREDOMINANTLY 30 PERCENT IN THE UPPER PORTION OF THE SHALE.

FOR SPECIFIC CONDITIONS AT VARIOUS DEPTHS, REFER TO THE INDIVIDUAL TEST BORING LOGS WHICH FORM A PART OF THESE PLANS.

LEGEND

- AUGER BORING LOCATION - PLAN VIEW
- PRESS AND/OR DRIVE SAMPLE AND/OR CORE BORING LOCATION - PLAN VIEW
- TR — TOP OF ROCK
- CAPPED PILE
- FOOTING
- FOOTING ON PILE
- HORIZONTAL BAR ON BORING LOG INDICATES THE DEPTH THE SAMPLE WAS TAKEN
- X/Y/Z — FIGURES BESIDE THE BORING LOG IN PROFILE INDICATE THE NUMBER OF BLOWS FOR STANDARD PENETRATION TEST
  - X = NO. OF BLOWS FOR FIRST 6"
  - Y = NO. OF BLOWS FOR SECOND 6"
  - Z = NO. OF BLOWS FOR THIRD 6"
- W — INDICATES FREE WATER ELEVATION
- INDICATES STATIC WATER ELEVATION

SYMBOLS OF ROCK TYPES

- COAL
- WEATHERED MUDSTONE
- MUDSTONE
- WEATHERED SHALE
- SHALE
- CLAYSTONE
- SILTSTONE
- WEATHERED SANDSTONE
- SANDSTONE
- LEACHED DOLOMITE
- DOLOMITE
- LEACHED LIMESTONE
- LIMESTONE
- BOULDERS or COBBLES

GENERAL INFORMATION

Drive sample / Press sample / Core borings

Drive sample borings are made by means of a mechanically-powered rotary-type drilling machine, employing a 2" O.D., 1-3/8" I.D. split spoon sampler, at 2.5 and/or 5-foot depth intervals, driven by means of a 140 lb. drop hammer with a free fall of 30". The number of blows required to drive the sampler 18" is considered the standard penetration test.

Drive/press borings are made by means of a mechanically-powered rotary-type drilling machine, employing a 2" O.D., 1-3/8" I.D. split spoon sampler, and 3" O.D. thin wall press sampler. The press sampler is advanced by continuous uniform pressure, applied by the drilling machine.

Core borings are made by means of a mechanically-powered rotary-type drilling machine, employing a NXM core barrel with industrial diamond cutting head.

The boring log sheets display a graphic plot of the information obtained including depth and elevation of the sample, type of sample, the standard penetration test readings in three 6-inch increments, depth and elevation of press samples, field number assigned to sample, sample description - based on laboratory tests utilizing the Casagrande AC classification system - and gradation, plasticity and moisture determinations. Results of strength and consolidation testing, if performed on undisturbed samples, will appear graphically on separate enclosures. Rock samples are displayed on the log sheets including depth and elevation of the sample, amount of recovery and a visual classification based on type, color, degree of hardness, grain size, deterioration, bedding, acid reaction and other qualifying factors.

At depths where materials are bouldery or gravelly to the extent that the sampler can not be utilized, a wash sample is procured and visually classified, in order to determine the general characteristics of the material. These samples are not considered sufficiently representative to warrant laboratory testing.

PARTICLE SIZE DEFINITIONS

12"	3"	2.0mm	0.42mm	0.074mm	0.005mm	
Boulders	Cobbles	Gravel	Coarse Sand	Fine Sand	Silt	Clay
		No. 10 sieve	No. 40 sieve	No. 200 sieve		

NOTE - ALL AVAILABLE SOIL AND BEDROCK INFORMATION WHICH CAN BE CONVENIENTLY SHOWN ON THE STRUCTURE FOUNDATION INVESTIGATION SHEETS HAS BEEN SO REPORTED. ADDITIONAL SUBSURFACE INVESTIGATIONS MAY HAVE BEEN MADE TO STUDY SOME SPECIAL ASPECT OF THE PROJECT. COPIES OF THIS DATA, IF ANY, MAY BE INSPECTED IN THE DISTRICT DEPUTY DIRECTOR'S OFFICE, THE BUREAU OF TESTS AT 1600 WEST BROAD STREET, THE PAVEMENT AND SOILS SECTION OF THE BUREAU OF LOCATION AND DESIGN OR IN THE BRIDGE BUREAU AT 25 SOUTH FRONT STREET.

STRUCTURE FOUNDATION INVESTIGATION
FAIRHILL ROAD BRIDGE OVER
RTA & NW RR
CLEVELAND, OHIO

R&R INTERNATIONAL INC.
Geotechnical Engineers • Geologists
1234 S. CLEVELAND-MASSILLON ROAD
P.O. BOX 4383
AKRON, OH 44321

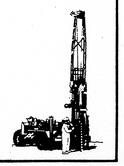

CHECKED BY	REVIEWED	DATE
J.H.	G.M.R.	1.21.91

Stokes 0031 (4:021) SFN: 1833936

FHWA REGION	STATE	PROJECT

2/3

SCALE : HORIZ. 1" = 20'
VERT. 1" = 10'

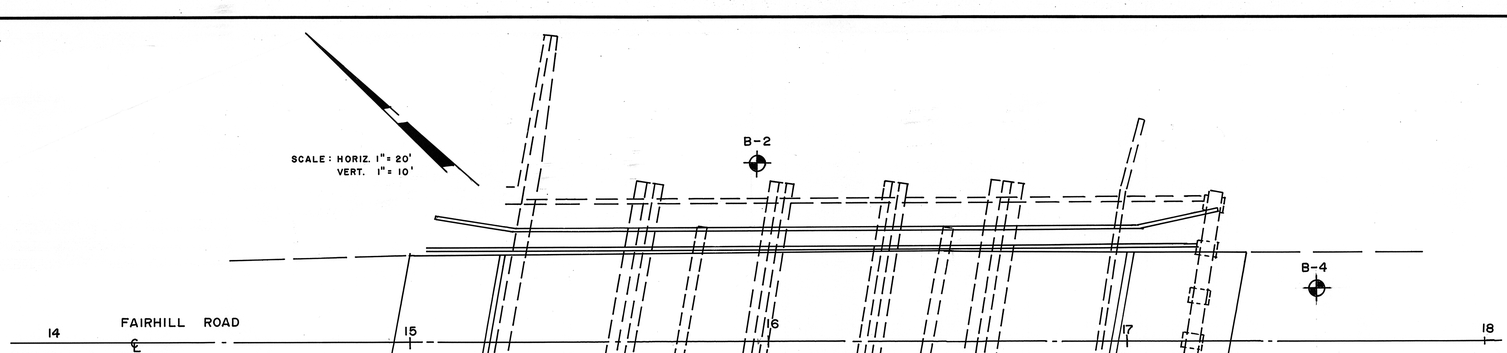

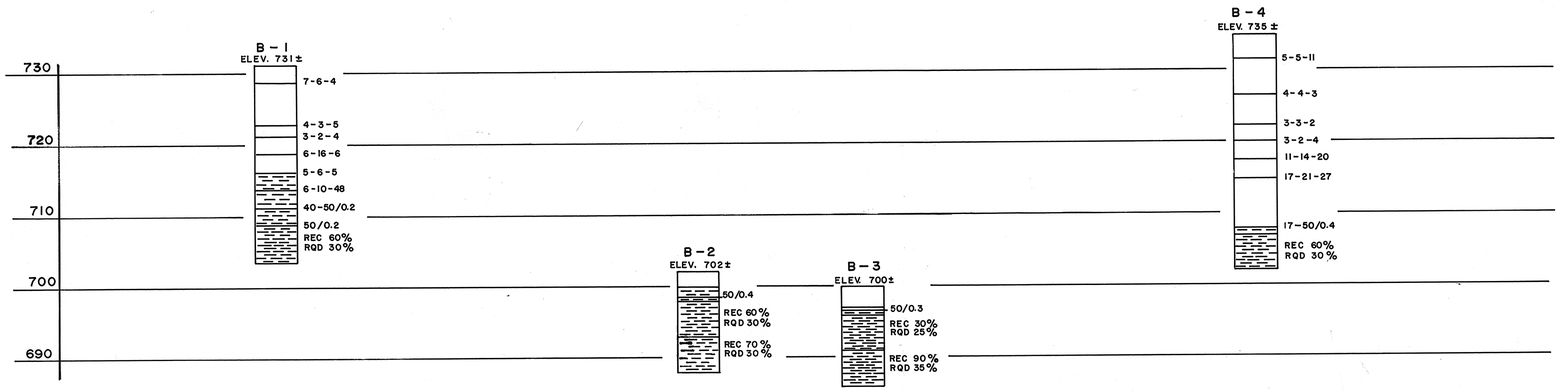

STRUCTURE FOUNDATION INVESTIGATION
FAIRHILL ROAD BRIDGE OVER
RTA & NW RR
CLEVELAND, OHIO

R&R INTERNATIONAL INC.
Geotechnical Engineers • Geologists
1234 S. CLEVELAND-MASSILLON ROAD
P.O. BOX 4383
AKRON, OH 44321

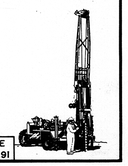

DRAWN BY	CHECKED BY	REVIEWED	DATE
V.K.	J. H.	G.M.R.	4.12.91

Stokes 0031 (4:021) SFN: 1833936

LOG OF BORING

Date Started 8-10-89 | Sampler Type SS | Dia. 2.00 inch. | Water Elev. 712.0
Date Completed 8-10-89 | Casing: length -- | Dia. 3.25 inch.
Boring No. B-1 | Station & Offset APPROX. STA 14+80 16'RT. | Surface Elev. 731 ±

ELEV.	DEPTH	STD.PEN. (N)	REC. Ft.	LOSS Ft.	DESCRIPTION	SAMPLE NO.	SAMPLE TYPE	PHYSICAL CHARACTERITICS % AGG.	COAR. SAND	FINE SAND	SILT	CLAY	L.L.	P.L.	P.I.	W.C. %	SHTL CLASS.
731.0	0.0																
730.7	0.3				ASPHALT												
730.4	0.6				BRICK												
729.7	1.3				CONCRETE												
		7-6-4	1.0			1	SS	9.8	23.8	55.3	*	11.1	---	---	---	6.5	A-3a
		4-3-5	1.0		Medium dense to loose, brown SAND, little silt, trace to little gravel, dry to moist.	2	SS										
		3-2-4	1.5			3	SS	2.1	13.9	73.8	*	10.2	---	---	---	9.9	A-3a
		6-16-6	1.5			4	SS										
716.0	15.0	5-6-5	1.5			5	SS	38.7	40.0	8.1	*	13.2	---	---	---	13.1	A-3a
		6-10-48	1.0			6	SS										
		40-50/0.2	0.5		Gray SHALE, extremely altered, soft to friable, laminated, with sandstone interbeds generally less than one-quarter inch thick.	7	SS										
		50/0.2	0.2		Note: water introduced into boring during the coring operations.	8	SS										
		REC=60%				RUN1	NXW										
		RQD=30%				22.5 to 27.5											
703.5	27.5				TERMINATION DEPTH 27.5 FEET												

(Proj. 010313-B1-2)

*: SILT AND CLAY COMBINED

LOG OF BORING

Date Started 8-31-89 | Sampler Type SS | Dia. 2.00 inch. | Water Elev. (DRY)
Date Completed 8-31-89 | Casing: length -- | Dia. 3.25 inch.
Boring No. B-3 | Station & Offset APPROX. STA 16+43 58'RT. | Surface Elev. 700 ±

ELEV.	DEPTH	STD.PEN. (N)	REC. Ft.	LOSS Ft.	DESCRIPTION	SAMPLE NO.	SAMPLE TYPE	PHYSICAL CHARACTERITICS % AGG.	COAR. SAND	FINE SAND	SILT	CLAY	L.L.	P.L.	P.I.	W.C. %	SHTL CLASS.
700.0	0.0																
699.0	1.0				GRAVEL												
697.0	3.0	50/0.3	0.3		Brown SAND, trace clay, dry.	1	SS										
		REC=30%				RUN 1	NXW										
		RQD=25%				4.0 to 9.0											
					Gray SHALE, extremely altered, soft to friable, laminated, with sandstone interbeds generally less than one-quarter inch thick.												
		REC=90%			Note: water introduced into boring during the coring operations.	RUN 2	NXW										
		RQD=35%				9.0 to 14.0											
686.0	14.0				TERMINATION DEPTH 14.0 FEET												

(Proj. 010313-B3-1)

*: SILT AND CLAY COMBINED

LOG OF BORING

Date Started 9-7-89 | Sampler Type SS | Dia. 2.00 inch. | Water Elev. (DRY)
Date Completed 9-7-89 | Casing: length -- | Dia. 3.25 inch.
Boring No. B-4 | Station & Offset APPROX. STA 17+53 15'LT. | Surface Elev. 735 ±

ELEV.	DEPTH	STD.PEN. (N)	REC. Ft.	LOSS Ft.	DESCRIPTION	SAMPLE NO.	SAMPLE TYPE	PHYSICAL CHARACTERITICS % AGG.	COAR. SAND	FINE SAND	SILT	CLAY	L.L.	P.L.	P.I.	W.C. %	SHTL CLASS.
735.0	0.0																
734.7	0.3				ASPHALT												
734.3	0.7				BRICK												
733.7	1.3				CONCRETE												
		5-5-11	0.5			1	SS	17.8	16.3	38.1	*	27.8	---	---	---	9.6	A-3a
		4-4-3	0.5		Medium dense to loose, brown SAND, little to some silt, trace to little gravel, dry.	2	SS										
722.5	12.5	3-3-2	1.0			3	SS	13.1	11.9	35.7	*	39.3	---	---	---	11.3	A-3a
					Loose, brown, SAND AND SILT, trace to little gravel, dry to moist.												
720.0	15.0	3-2-4	1.0			4	SS	4.8	16.0	59.4	*	19.8	---	---	---	8.9	A-3a
		11-14-20	1.4			5	SS	29.5	39.1	19.8	*	11.6	---	---	---	6.6	A-3a
		17-21-27	1.2		Loose to dense, brown SAND, trace to little silt, trace to little gravel, dry.	6	SS	2.4	8.0	80.5	*	9.1	---	---	---	9.7	A-3a
708.0	27.0	17-50/0.4	0.8			7	SS										
		REC=60%			Gray SHALE, extremely altered, soft to friable, laminated, with sandstone interbeds generally less than one-quarter inch thick.	RUN1	NXW										
		RQD=30%				28.0 to 33.0											
					Note: water introduced into boring during the coring operations.												
702.0	33.0				TERMINATION DEPTH 27.5 FEET												

(Proj. 010313-B4-2)

*: SILT AND CLAY COMBINED

LOG OF BORING

Date Started 9-4-89 | Sampler Type SS | Dia. 2.00 inch. | Water Elev. (DRY)
Date Completed 9-4-89 | Casing: length -- | Dia. 3.25 inch.
Boring No. B-2 | Station & Offset APPROX. STA 15+97 50'LT. | Surface Elev. 702 ±

ELEV.	DEPTH	STD.PEN. (N)	REC. Ft.	LOSS Ft.	DESCRIPTION	SAMPLE NO.	SAMPLE TYPE	PHYSICAL CHARACTERITICS % AGG.	COAR. SAND	FINE SAND	SILT	CLAY	L.L.	P.L.	P.I.	W.C. %	SHTL CLASS.
702.0	0.0																
700.0	2.0				GRAVEL												
		50/0.4	0.1			1	SS										
		REC=60%				RUN 1	NXW										
		RQD=30%				4.0 to 9.0											
					Gray SHALE, extremely altered, soft to friable, laminated, with sandstone interbeds generally less than one-quarter inch thick.												
		REC=70%			Note: water introduced into boring during the coring operations.	RUN 2	NXW										
		RQD=30%				9.0 to 14.0											
688.0	14.0				TERMINATION DEPTH 14.0 FEET												

(Proj. 010313-B2-1)

*: SILT AND CLAY COMBINED

FHWA REGION	STATE	PROJECT

3
3

STRUCTURE FOUNDATION INVESTIGATION
FAIRHILL ROAD BRIDGE OVER
RTA & NW RR
CLEVELAND, OHIO

R&R INTERNATIONAL INC.
Geotechnical Engineers • Geologists
1234 S. CLEVELAND-MASSILLON ROAD
P.O. BOX 4383
AKRON, OH 44321

TIPED BY	CHECKED BY	REVIEWED	DATE
J.X.	J.H.	G.M.R.	4.12.91

Stokes 0031 (4:021) SFN: 1833936