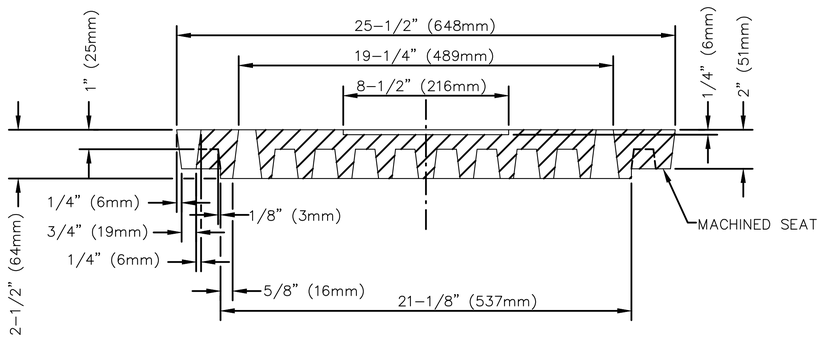

SECTION "A-A"

NOTES:

CASTINGS SHALL MINIMALLY MEET THE REQUIREMENTS OF ITEM 611-711.12, ASTM A 48, AND MINIMALLY BE CLASS 35B GRAY IRON. THE DESIGN SHALL BE ESSENTIALLY THE SAME AND EQUALLY AS STRONG AS SHOWN HEREON.

MINIMUM WEIGHT = 200 LBS. (90 kg.) ±5%

PROVIDED THEY COMPLY WITH THE SPECIFICATIONS, DETAILS, DIMENSIONS AND MINIMUM WEIGHTS, ACCEPTABLE CASTINGS ARE NEENAH No. R-2573-1 TYPE C, EAST JORDAN No. 1700M GRATE) OR APPROVED EQUAL.

BEARING AREAS OF THE COVER SHALL BE FINISHED SMOOTH AND FITTED SO AS TO PROVIDE A FIRM AND EVEN SEAT FOR ALL PORTIONS OF THE COVER IN THE FRAME. NO PROJECTIONS SHALL EXIST ON BEARING AREAS OF THE CASTING AND THE COVER SHALL SEAT IN ITS FRAME WITHOUT ROCKING. FRAME AND COVER SHALL BE FITTED, MATCHED AND MARKED BEFORE DELIVERY TO THE PROJECT. THE COVER SEAT SHALL BE MACHINED FOR A PERFECT FIT.

THIS COVER IS USED IN CONJUNCTION WITH CUYAHOGA COUNTY MANHOLE No.9 OR 9A. FRAME (SEE MH-10C).

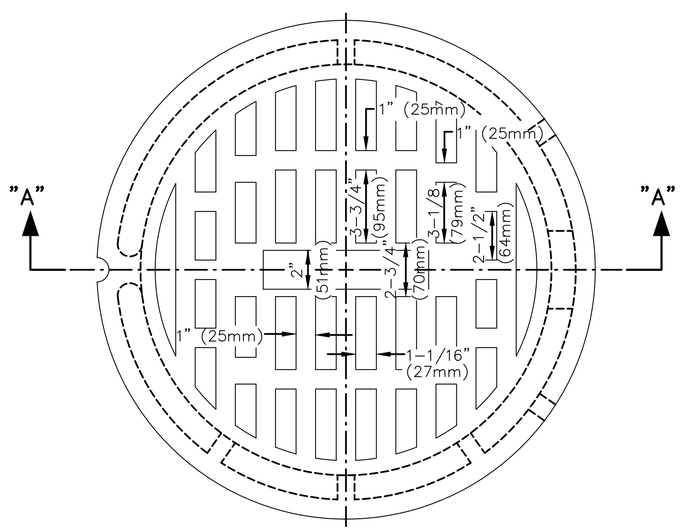

TOP PLAN DETAILS

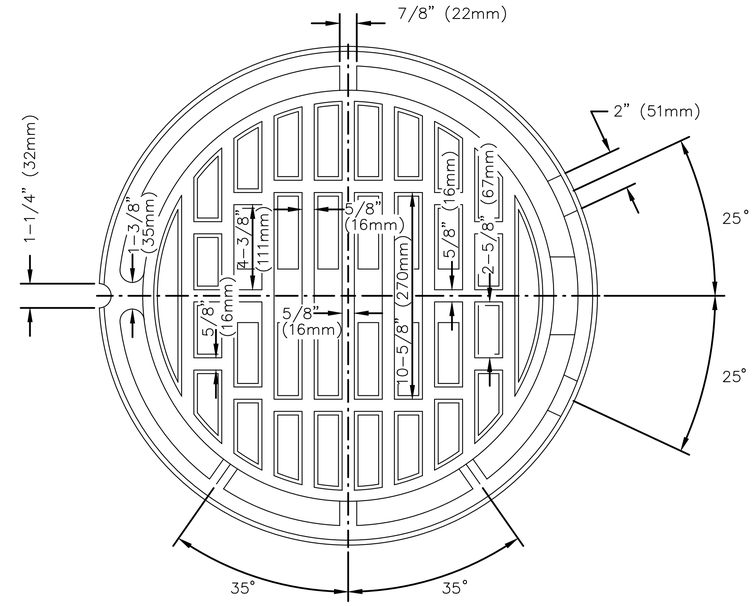

BOTTOM PLAN DETAILS

CUYAHOGA COUNTY ENGINEER	
CUYAHOGA COUNTY MANHOLE COVER No.37	DATE 12-07-99 10-29-01 10-31-13 11-15-17 12-02-19
CONSTRUCTION DRAWING MH-11C	